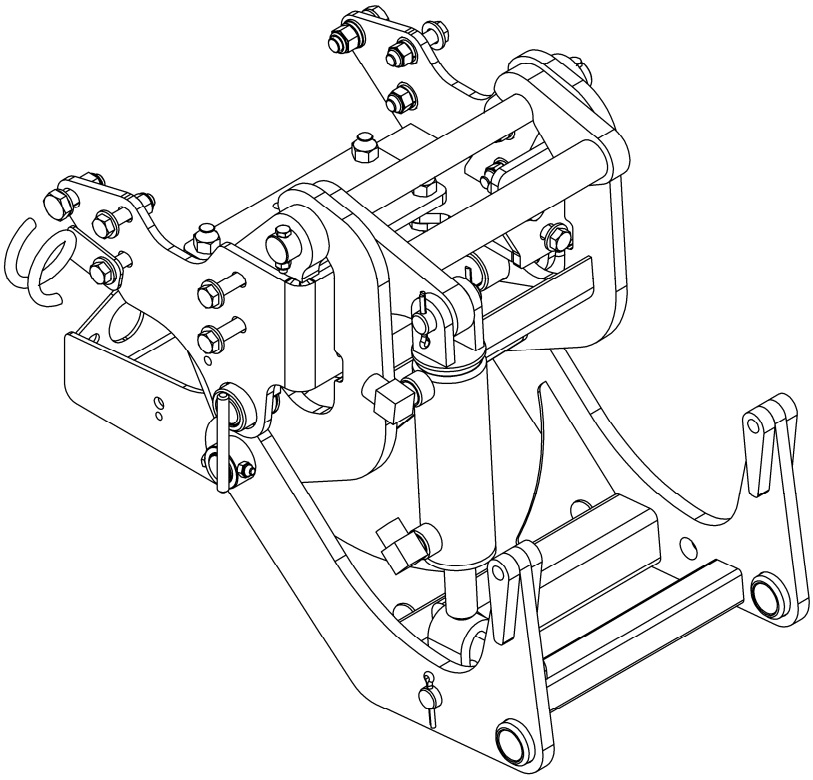

OPERATOR'S AND AND PARTS MANUAL

SUBFRAME FOR JOHN DEERE TRACTOR SERIES 1

SERIAL NUMBER 21700001 AND UP

OM 0459QH-A
Rev1 12-17

INTRODUCTION

TO THE PURCHASER

All products are designed to give safe, dependable service if they are operated and maintained according to instructions. **Read and understand this manual before operation, and keep it in your files for further reference.**

This manual has been prepared to assist the owner and operators in the safe operation and suitable maintenance of the equipment. The information is applicable to products at the time of manufacture and does not include modifications made afterwards.

Read and understand this operator's manual before attempting to put equipment into service. Familiarize yourself with the operating instructions **AND ALL THE SAFETY RECOMMENDATIONS** contained in this manual and those labeled on the equipment and on the machine. Follow the safety recommendations and make sure that those with whom you work follow them.

TO THE DEALER

Give this manual to the owner upon delivery of the equipment.

TO THE PURCHASER AND THE DEALER

Illustrations

The illustrations may not necessarily reproduce the full detail and the exact shape of the parts or depict the actual models, but are for reference only.

Direction Reference

All references to right and left, forward or rearward are from the operator seat.

To assist your dealer in handling your needs, please record hereafter the model number and serial number of your equipment and machine. It is also advisable to supply them to your insurance company. It will be helpful in the event that equipment or machine is lost or stolen

MODEL: _____

SERIAL NUMBER: _____

DATE OF PURCHASE: _____

DEALER NAME: _____

DEALER TELEPHONE NUMBER: _____

INTRODUCTION

All products are designed to give safe, dependable service if they are operated and maintained according to instructions. **Read and understand this manual before operation**. It is the owner's responsibility to be certain anyone operating this product reads this manual, and all other applicable manuals, to become familiar with this equipment and all safety precautions. Failure to do so could result in serious personal injury or equipment damage. If you have any questions, consult your dealer.

SAFETY FIRST

This symbol, the industry's "Safety Alert Symbol", is used throughout this manual and on labels on the machine itself to warn of the possibility of personal injury. Read these instructions carefully. It is essential that you read the instructions and safety regulations before you attempt to assemble or use this unit.

DANGER :	Indicates an imminently hazardous situation which, if not avoided, will result in death or serious injury.
WARNING :	Indicates a potentially hazardous situation which, if not avoided, could result in death or serious injury.
CAUTION :	Indicates a potentially hazardous situation which, if not avoided, may result in minor or moderate injury.
IMPORTANT :	Indicates that equipment or property damage could result if instructions are not followed.
NOTE :	Gives helpful information.

TABLE OF CONTENT

INTRODUCTION 1

TABLE OF CONTENT 3

SAFETY INFORMATION 5

GENERAL SAFETY INFORMATION- Pictograms 7

ESTIMATED ASSEMBLY TIME 9

ASSEMBLY 10

Assembly of 4 Point Hitch and Subframe 10

Installation of Supports 11

Installation WITHOUT Front Guard and Mower Supports 15

Installation of Support Reinforcement 16

Assembly of Male Quick Hitch to Subframe 17

Installation of Hydraulic Cyinder 18

Installation of Output Shaft 19

Installation of Subframe Assembly on Tractor 20

Installation of Hydraulic Components 22

Installation of Hose Support 23

Connecting Hydraulic Hoses to the Tractor 24

Installation of Driveline 25

TABLE OF CONTENT

OPERATION 26

General Preparation 26

Operation 26

Controls 26

Procédure for Connecting and Disconnecting the Snowblower 27

Precautions to follow BEFORE each connection 27

Procedure to follow to connect the snowblower 28

Precautions to follow BEFORE each disconnection 31

Procedure to follow to disconnect the snowblower 31

Removing the Subframe from the Tractor 33

Reinstalling the Subframe on the Tractor 35

MAINTENANCE 37

Maintenance Schedule 37

TROUBLESHOOTING 39

STORAGE 40

PARTS 41

Male Hitch and Subframe 41

Drive Kit 43

Fixed Driveline 4700050 44

Male Driveline 4700047 45

TORQUE SPECIFICATION TABLE 46

ADAPTER INSTALLATION PROCESS 47

SAFETY INFORMATION

Children

Tragic accidents can occur if the operator is not alert to the presence of children. Children are generally attracted to machines and the work being done. Never assume children will remain where you last saw them

1. Keep children out of the operating area and under the watchful eye of another responsible adult.
2. Be alert and turn machine off if children enter the work area.
3. Before and when backing, look behind for small children.
4. Never carry children while operating the machine. They may fall off and be seriously injured or interfere with the safe operation of the machine.
5. Never allow children to play on the machine or attachment even when the machine is turned off.
6. Never allow children to operate the machine even under adult supervision.
7. Use extra care when approaching blind corners, shrubs, trees, or other obstructions that might hide children from sight.

Before Operation

1. Read and understand both the machine AND implement operator's manual before using the snowblower. Know how to operate all controls and how to stop the unit and disengage the controls quickly. Lack of knowledge can lead to accidents.
2. Park the machine/implement on level ground, set the parking brake, lower the implement to the ground, place all control levers in neutral, shut off the engine and remove the ignition key and allow the rotating parts to stop BEFORE making any implement adjustments, repairs or inspections.
3. Keep clear of all rotating parts. Do not put hands or feet under, or into snowblower and subframe with engine running.
4. For your safety, do not work under any hydraulically supported machine elements, they may creep down, suddenly drop or be accidentally lowered. Do not use loader, quick hitch, or an implement as a jack for servicing.
5. Do not operate the machine/implement that is defective or has missing parts. Make sure that all recommended maintenance procedures are completed before operating the unit.
6. Keep the machine/implement clean. Snow, dirt or ice build-up can lead to malfunction or personal injury from thawing and refreezing in garage. Inspect and clean every rotating parts.
7. Do not modify or alter this implement or any of its components, or any implement function without first consulting your dealer. The manufacturer will not claim responsibility for fitment of unapproved parts and/or accessories and any damages as a result of their use.
8. Verify that all machine/implement safety protective devices are in place. Shields, guards and covers must be correctly installed at all times. When necessary to remove these for servicing, cleaning, or repair work, they must be reinstalled immediately.
9. Always make sure all implement components are properly installed and securely fastened.
10. Check that all machine/implement drivelines are in good working order.
11. Check for moving parts excessive wear regularly. ALWAYS USE GENUINE PARTS WHEN REPLACEMENT PARTS ARE REQUIRED.
12. Prior to operation, clear work area and mark all curbs, pipes, etc. that cannot be moved.
13. Inspect the machine/implement after striking any foreign object to assure that all machine/implement parts are safe and secure and not damaged.
14. Handle fuel with care, as it is highly flammable. Use approved fuel container.
15. Never add fuel to a running engine or a hot engine.
16. Fill fuel tank outdoors with extreme care. Never fill fuel tank indoors. Replace fuel cap securely and wipe up spilled fuel. Always refuel using properly grounded system.

17. Check all machine controls regularly and adjust where necessary. Make sure that the brakes are evenly adjusted. Periodically check all nuts and bolts for tightness, especially wheel hub and rim nuts.

18. Make sure the machine is counterweighted and has tire chains for better traction and stability as recommended by your dealer. Weights provide the necessary balance to improve stability, traction and steering. Use only those recommended by your dealer.

19. Prolonged exposure to loud noise can cause impairment or loss of hearing. Wear a suitable hearing protective device such as earmuffs or earplugs to protect against objectionable or uncomfortable noises.

During Operation

1. Never allow anyone to operate the machine and implement until they have read the manuals completely and are thoroughly familiar with their basic operation. Lack of operating knowledge can lead to accidents.

2. Do not allow anyone to ride on the machine/implement at any time. The only one allowed is the operator that MUST sit in the driver seat.

3. Never allow anyone near the work area. The debris that can be thrown could cause serious personal injuries.

4. Never stand alongside of the implement while the engine is running.

5. Never operate the implement without safety protective devices in place. All machine/implement shields, guards and covers must be correctly installed at all times.

6. Keep clear of all rotating parts. Do not put hands or feet under, or into the implement with engine running.

7. If the implement starts to vibrate abnormally, disengage the PTO, stop the engine immediately and check for cause. Excessive vibration is generally a sign of trouble.

8. Park the machine/implement on level ground, place the transmission in neutral, set the parking brake, disengage the driving system, lower the equipment to the ground, place all levers including auxiliary control levers in neutral, shut off the engine and remove the ignition key BEFORE LEAVING THE MACHINE.

9. Always drive the machine at speeds compatible with safety, especially when operating over rough ground, crossing ditches, slippery surface or when turning.

10. Operate only with good visibility and during daylight hours, or when the area is well lit with bright artificial light.

11. Do not run the engine indoors except when starting engine and transporting attachment in or out of building. Carbon monoxide gas is colorless, odorless and deadly.

12. Exercise extreme caution when operating on or crossing a gravel drive, walks, or roads. Stay alert for hidden hazards or traffic.

13. Use extra caution when backing up.

14. Operate up and down (not across) intermediate slopes. Avoid sudden starts and stops.

15. Drive machine backwards up steeper slopes with the implement off. Then operate as you travel down the slope.

16. Never park the machine on a steep slope. Do not attempt to operate on steep slopes. If operating on slopes is necessary, exercise extreme caution when changing direction.

17. Disengage power to implement when transporting or when not in use.

GENERAL SAFETY INFORMATION

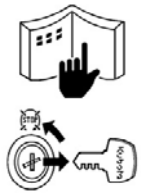

BEFORE YOU START SERVICE

- Read all instructions and safety instructions in this manual and on your machine safety decals.
- Clean the work area and machine.
- Park the machine on a stable and level ground, and set the parking brake.
- Lower the implement to the ground.
- Stop the engine, then remove the key.
- Disconnect the battery negative cable.
- Hang a **"DO NOT OPERATE"** tag in the operator station.

No Smoking or Open Flames while Fueling

- Fuel is extremely flammable and dangerous. Never smoke near fuel. If fuel is spilled on the machine, its engine, or electrical parts, it may cause a fire. If fuel is spilled, wipe it all up immediately.
- Never smoke while filling the machine with fuel. And always tighten the fuel cap securely and wipe up any spilled fuel.

- When performing maintenance on the equipment, hang the DO NOT OPERATE sign where it will be obvious from and around the driver's seat.
- When performing maintenance or repairs, always lower attachments to the ground, stop the engine and secure the tracks with blocks.
- When performing maintenance on the equipment, always disconnect the negative battery cable.
- Before using tools, make sure you understand how to use them correctly and use tools in good condition and of the right size for the job.

- Before getting on/off of the machine, clean off around the steps so there is no mud on them. Always give yourself 3-point support when getting on/off the machine.

CAUTION

- **3-point support means using both legs and one hand or both hands and one leg as you climb up/down.**

START SAFELY

- Do not do the procedures below when you start the engine.
  - short across starter terminals
  - bypass the safety start switch
- Do not alter or remove any part of machine safety system.
- Before you start the engine, make sure that all shift levers are in neutral positions or in disengaged positions.
- Do not start the engine when you stay on the ground. Start the engine only from operator's seat.

- Do not remove the radiator cap when the engine operates, or immediately after it stops. If not, hot water can spout out from the radiator. Only remove the radiator cap when it is at a sufficiently low temperature to touch with bare hands. Slowly loosen the cap to release the pressure before you remove it fully.

Starting the Machine Safely

- Before starting the engine, always sit in the driver's seat and make sure the area is safe and clear.
- As it is dangerous, never start the engine from anywhere but the driver's seat.
- Always check and make sure control lever(s) are not engaged before starting the engine.
- Never start the engine by hot-wiring the starter circuit. This is not only dangerous, but may damage the machine.

- The engine, muffler, radiator, hydraulic line, etc., have parts that remain very hot even after the engine has been stopped. Be sure to avoid these parts, as touching them can result in burns. Radiator coolant, hydraulic fluid and oil also remain hot. Therefore, do not attempt to remove caps and plugs, etc., before these fluids have sufficiently cooled.
- Make sure the coolant temperature has dropped sufficiently before opening the radiator cap. Also, since the inside of the radiator is pressurized, when removing the cap, first loosen it to release the pressure before removing the cap completely.

- Wear clothes appropriate for working on equipment. Do not wear loose-fitting clothes as they may catch on the machine controls.
- When working on the equipment, use all safety gear, such as a helmet, safety glasses and shoes, that are required by law or regulation.
- Never perform maintenance while drowsy or under the influence of alcohol or drugs.

- Grease is under high pressure inside the hydraulic cylinder. It is very dangerous to loosen a grease nipple quickly as it may shoot off. Always loosen grease nipples slowly.
- And never face a grease nipple while loosening it.

Be Ready for an Emergency

- Keep a first-aid kit and fire extinguisher close at hand so you can use it when needed.
- Keep emergency contact information for doctors, hospitals and ERs handy.

PREVENT A FIRE

- Fuel is very flammable and explosive under some conditions. Do not smoke or let flames or sparks in your work area.
- To prevent sparks from an accidental short circuit, always disconnect the battery negative cable first and connect it last.
- The battery gas can cause an explosion. Keep the sparks and open flame away from the top of battery, especially when you charge the battery.
- Make sure that you do not spill fuel on the engine.

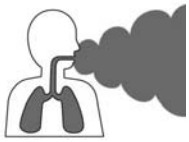

KEEP A GOOD AIRFLOW IN THE WORK AREA

- If the engine is in operation, make sure that the area has good airflow. Do not operate the engine in a closed area. The exhaust gas contains poisonous carbon monoxide.

Dispose of Waste Fluids Properly

- Never dispose of waste fluids on the ground, in the gutter, a river, pond or lake. Always dispose of hazardous substances like waste oil, coolant and electrolytic fluid in accordance with the relevant environmental protection regulations.
- Keep the safety plates clean so they can be read. If a safety plate is damaged and comes off or becomes illegible, put a plate with the same warnings back in its place.

GENERAL SAFETY INFORMATION

	• The pressure in the hydraulic circuit stays at pressure even after the engine stops. Before removing parts, such as hydraulic devices from the machine, first release the pressure. Please note that when releasing residual pressure, the machine itself and/or implements may move without warning, so be very careful when releasing the pressure. • Oil gushing out under pressure is extremely dangerous as it may pierce your skin or your eyes. Similarly, oil leaking out of pinholes is not visible. So when checking for oil leaks, always wear safety glasses and gloves and use a piece of cardboard or a wood block to shield yourself from oil.		• When you need to access the underside of the machine for maintenance purposes, but sure to support the machine with a safety stand. Getting under the machine while supporting the machine by machine's own hydraulic cylinder or using a hydraulic jack can be extremely dangerous in the event of a hydraulic fluid leakage or similar mishap. (1) Safety stand (2) Secure point for safety stand
	• Do not open a fuel system under high pressure. The fluid under high pressure that stays in fuel lines can cause serious injury. Do not disconnect or repair the fuel lines, sensors, or any other components between the fuel pump and injectors on engines with a common rail fuel system under high pressure. • Put on an applicable ear protective device (earmuffs or earplugs) to prevent injury against loud noises. • Be careful about electric shock. The engine generates a high voltage of more than DC100 V in the ECU and is applied to the injector.		• Whenever it is necessary to open the engine covers or hood in order to service the machine, always prop them open. • If it is absolutely necessary to run the engine while working on the machine, make sure you are clear of all rotating or moving parts. Also take care not to leave anything, such as tools or rags, near any moving parts.
	• Engage the loader control valve lock to prevent accidental actuation when the implement is not in use or during transport. Do not utilize the valve lock for machine maintenance or repair. • Do not perform machine maintenance with loader in the air. If possible, follow loader instructions to remove loader before performing maintenance. • If the machine has a backhoe, engage swing and boom locks.		

ESTIMATED ASSEMBLY TIME

Refer to the following table for the estimated assembly time to open the package and assemble the equipment.

	4-POINT HITCH	DRIVE SYSTEM
Estimated initial installation time	40-50 min	25-35 min
Reinstallation (on the tractor)	2-4 min	5-10 min

The assembly times of the table are only a reference under normal conditions according to the following assumptions:

1. The assembly is done by a competent person who is familiar with the equipment.

2. The following tools and materials are prepared:

   1) Tools:
   - Wrench set (flat wrenches)
   - Ratchet & socket set
   - Allen key set
   - Cutting pliers
   - Security gloves
   - Safety glasses

   2) Material:
   - Thread locker (Loctite #243)
   - Thread sealant (Teflon tape)

ASSEMBLY

ASSEMBLY OF 4 POINT HITCH & SUBFRAME

Before assembly, separate all hardware according to size. When the assembly is complete, tighten all the bolts by referring to the "Torque Specification Table" located at the end of the manual.

Preparation

Remove the lawnmower and the front loader from the tractor if installed by following the instruction in the tractor's operator's manual.

IMPORTANT: The front loader and subframe should never be installed simultaneously on the tractor.

WARNING: To avoid serious personal injury or death: Read and understand the SAFETY INFORMATION on the previous pages before installation and operation Perform all the assembly with unit properly locked and supported.

WARNING: To avoid serious personal injury or death: Park the tractor on level ground, place the transmission in neutral, set the parking brake, disengage the drive system, put all levers to neutral, shut off the engine, remove the ignition key and wait for all movement to stop BEFORE starting installation.

ASSEMBLY

Installation of the Supports

1. Gather items 2 to 7 listed in the table of figure 1.
2. **Figure 1:** Insert the left support (item 2) inside and underneath the tractor frame (item 1) and attach without tightening with two 7/16"NC x 1 3/4" lg hex bolts, four 12mm (Ø13mm int.) flat washers, two 7/16" lockwashers and two 7/16"NC nylon insert nut (items 4-7-6-5).
3. **Figure 1:** Proceed in the same way to attach the right support (item 3).

Note: The supports (items 2-3) are compatible with the front loader and lawnmower and can remain permanently on the tractor.

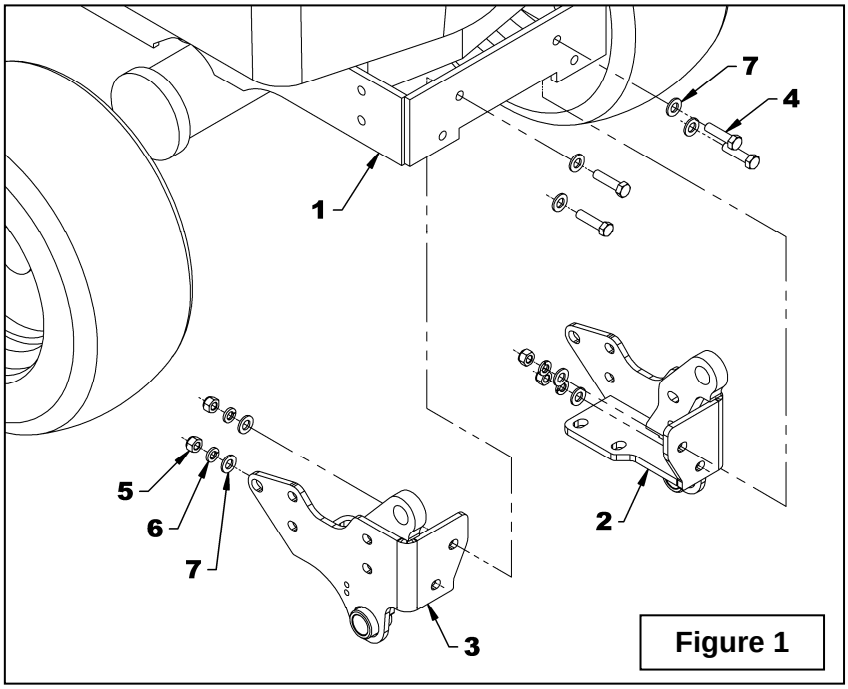

Figure 1

N°	DESCRIPTION	QTY
1	Tractor	1
2	Left support	1
3	Right support	1
4	Hex. bolt 7/16"NC x 1 3/4" lg., Gr.5, PTD	4
5	Nylon insert nut 7/16" NC, PTD	4
6	Lockwasher 7/16", PTD	4
7	Flat washer 12mm (Ø13mm INT.), PTD	8

ASSEMBLY

4. Gather items 4 to 7 listed in the table of figure 2.
5. **Figure 2:** Attach without tightening the supports (items 2-3) with two 1/2"NC x 1 3/4" lg. hex. bolts (item 4), four 12mm (Ø13mm int.) flat washers, two 1/2" lockwashers and two 1/2"NC nylon insert nuts (items 4-7-6-5).

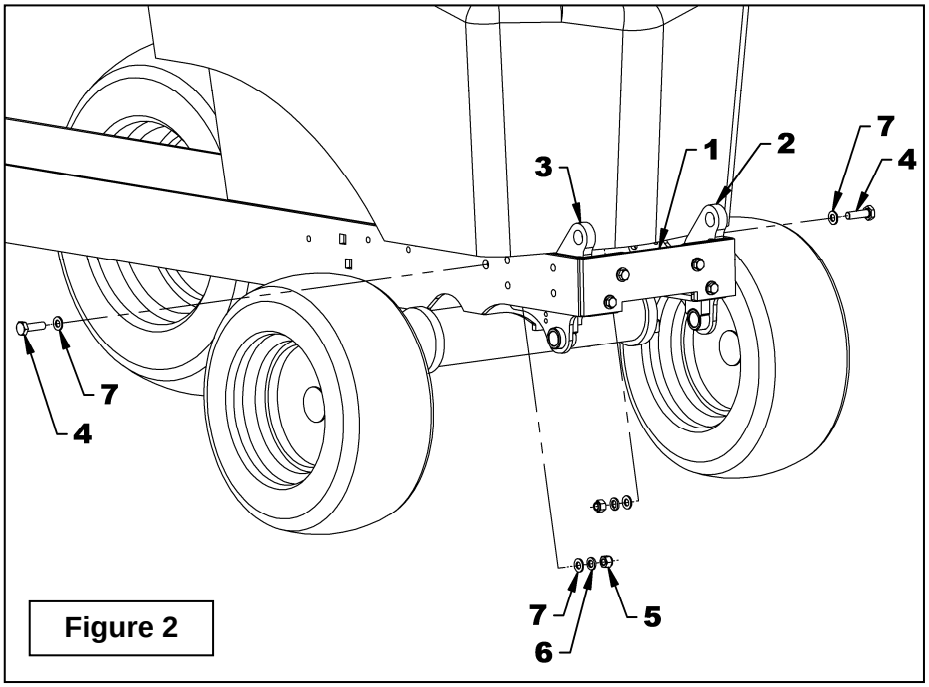

Figure 2

N°	DESCRIPTION	QTY
1	Tractor	1
2	Left support	1
3	Right support	1
4	Hex. bolt 1/2"NC x 1 3/4" LG., Gr.5, PTD	2
5	Nylon insert nut 1/2" NC, PTD	2
6	Lockwasher 1/2", PTD	2
7	Flat washer 12mm (Ø13mm int.), PTD	4

ASSEMBLY

6. Gather items 4 to 6 listed in the table of figure 3.
7. **Figure 3:** Insert the Ø1" x 13 3/4" lg. pin (item 4) inside the supports (items 2-3) and secure with two 1/4"NC x 1 1/2" lg. hex bolts (item 5) and two1/4"NC nylon insert nuts (item 6).

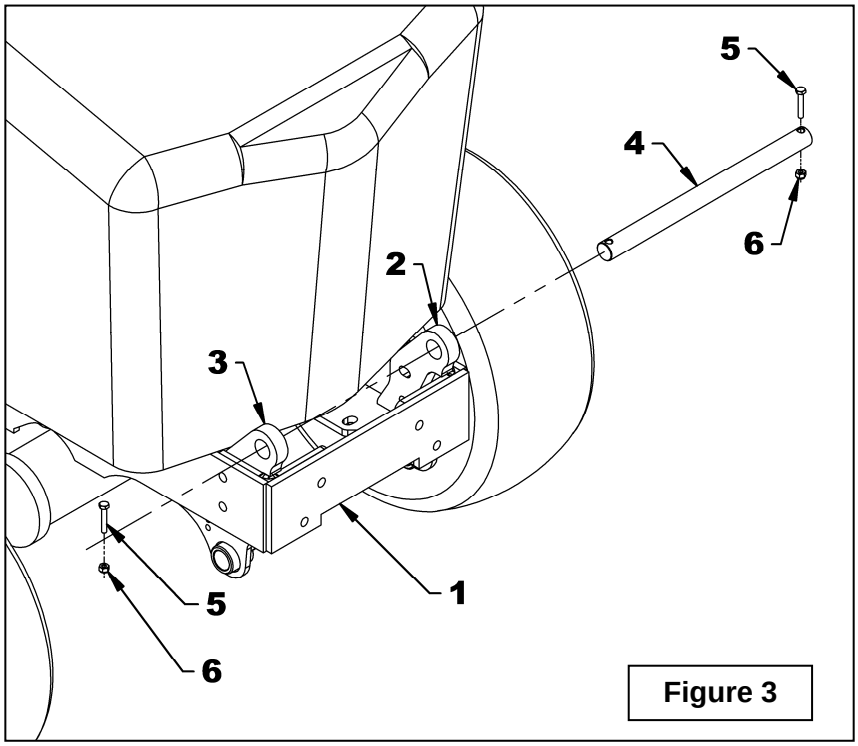

Figure 3

N°	DESCRIPTION	QTY
1	Tractor	1
2	Left support	1
3	Right support	1
4	Pin Ø1" X 13 3/4" LG, PTD	1
5	Hex. bolt 1/4"NC X 1 1/2", PTD	2
6	Nylon insert nut 1/4"NC, PTD	2

ASSEMBLY

Installation WITH the Front Guard and/or the Mower Supports

1. Gather all the items listed in the table of figure 4.
2. **Figure 4:** Place the round spacers (item 4) and/or the mower supports (item 2-3) and/or the front guard (item 5) as well as the hose support (item 6) as indicated on the figure.
3. **Figure 4:** Attach everything with four 7/16"NC x 2" lg. hex. bolts (item 9), four 7/16"NC x 3 1/4" lg. hex. bolts (item 10), 12mm (Ø13mm int.) flat washers, 3/8" lockwashers and 7/16"NC nylon insert nuts (items 13-12-11). **Note:** The hose support (item 6) must be placed at an angle of 10° upwards as shown on figure 4.
4. Tighten the hardware holding the supports (items 7-8) firmly according to the torque specification table at the end of the manual.

NOTE: The two 7/16"NC x 1 1/2" hex bolts and the 7/16"NC x 2 1/2" hex bolts remaining will not be used.

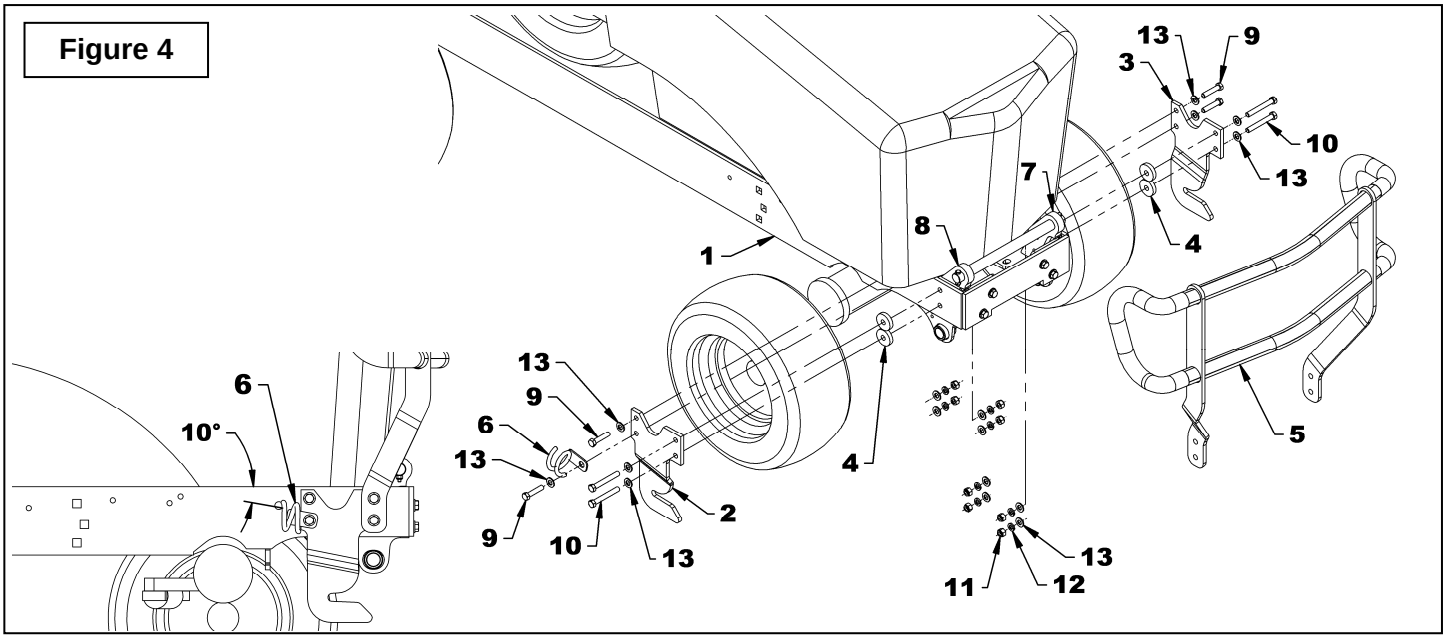

N°	DESCRIPTION	QTY
1	Tractor	1
2	Mower right support	1
3	Mower left support	1
4	Round spacer	4
5	Front guard	1
6	Hose support	1
7	Left support	1
8	Right support	1
9	Hex. bolt 7/16"NC X 2" lg., PTD	4
10	Hex. bolt 7/16"NC X 3 1/4" lg., PTD	4
11	Nylon insert nut 7/16"NC, PTD	8
12	Lockwasher 7/16", PTD	8
13	Flat washer 12mm (Ø13mm int.), PTD	8

ASSEMBLY

Installation WITHOUT the Front Guard and the Mower Supports

1. Gather items 2 and 5 to 10 listed in the table of figure 5.
2. **Figure 5:** Place the hose support (item 2) as shown on figure 5
3. **Figure 5:** Attach the supports (items 3-4) with two 7/16"NC x 1 1/2" lg. hex. bolts (item 5), two 7/16"NC x 2" lg. hex. bolts (item 6), four 7/16"NC x 2 1/2" lg. hex. bolts (item 7), the 12mm (Ø13mm int.) flat washers, 3/8" lockwashers and 7/16"NC nylon insert nuts (items 10-9-8). **Note**: The hose support (item 6) must be placed at an angle of 10° upwards as shown on figure 5.
4. **Figure 5:** Tighten the hardware holding the supports (items 3-4) firmly according to the torque specification table at the end of the manual.

NOTE: The two 7/16"NC x 2" lg hex bolts and the four 7/16"NC x 3 1/4" lg hex bolts remaining will not be used.

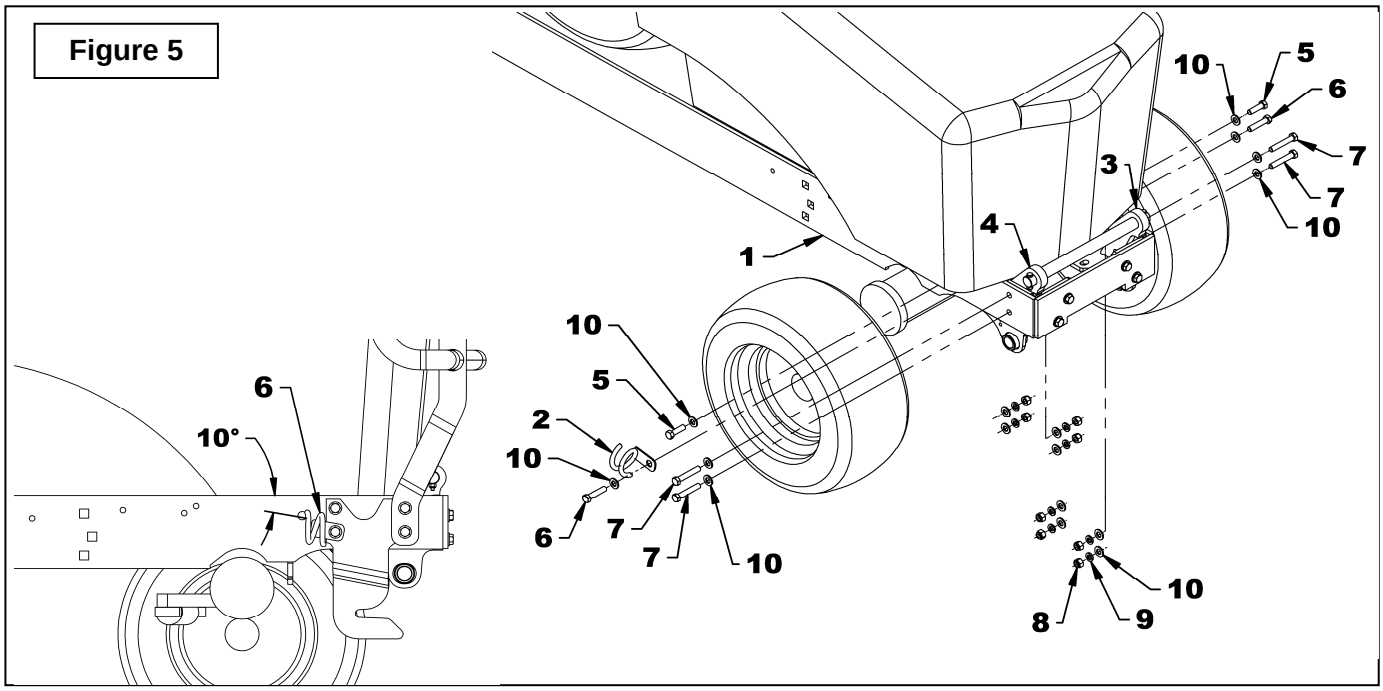

N°	DESCRIPTION	QTY
1	Tractor	1
2	Hose support	1
3	Left support	1
4	Right support	1
5	Hex. bolt 7/16"NC X 1 1/2" lg., PTD	2
6	Hex. bolt 7/16"NC X 2" lg., PTD	2
7	Hex. bolt 7/16"NC X 2 1/2" lg., PTD	4
8	Nylon insert nut 7/16"NC, PTD	8
9	Lockwasher 7/16", PTD	8
10	Flat washer 12mm (Ø13mm int.), PTD	8

ASSEMBLY

Installation of Support Reinforcement

1. Gather items 3 to 6 listed in the table of figure 6.
2. **Figure 6:** Place the support reinforcement (item 3) on the supports (items 1-2) and attach with 1/2"NC x 1 3/4" lg hex. bolts (item 4), 1/2" lockwashers (item 5) and 1/2" flat washers (item 6).

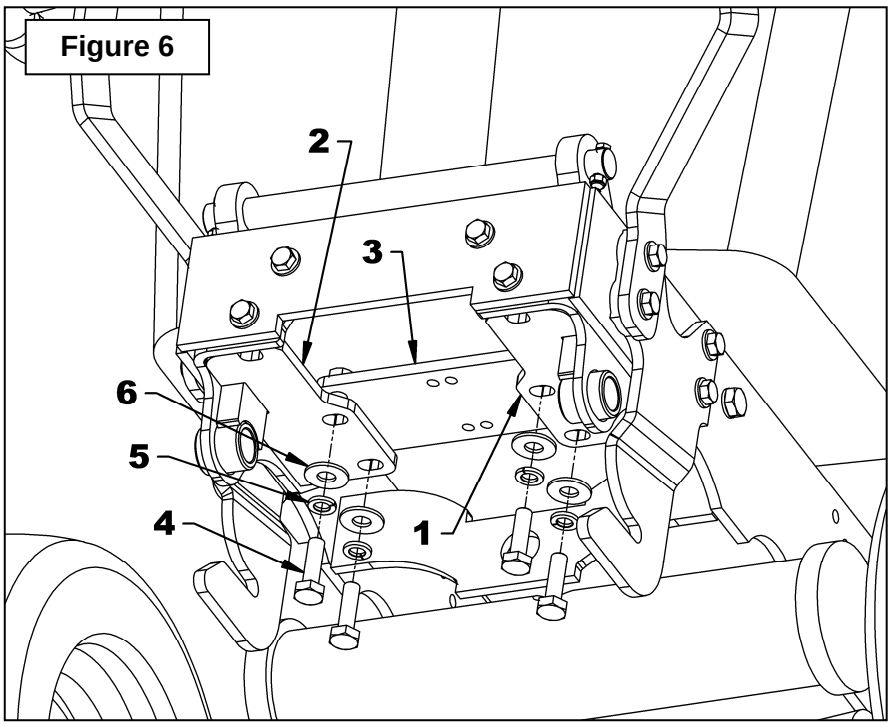

N°	DESCRIPTION	QTY
1	Left support	1
2	Right support	1
3	Support reinforcement	1
4	Hex. bolt 1/2"NC X 1 3/4" lg., PTD	4
5	Lockwasher 1/2", PTD	4
6	Flat washer 1/2" (Ø9/16" int.), PTD	4

ASSEMBLY

Assembling the Male Quick Hitch to the Subframe

1. Gather the items listed in the table of figures 7, 7a & 7b.
2. **Figure 7:** Screw the two grease fittings 1/4 "NF (item 6) of the subframe
3. **Figure 7a:** Attach the male hitch (item 2) to the subframe (item 1) with the Ø1" x 13 3/4" lg. pin (item 3), two 1/4"NC x 2" lg. hex. bolt (item 4) and 1/4"NC nylon insert nuts (item 5).

IMPORTANT: To avoid interference with the mower supports (items 2-3, figure 4), the two 1/4"NC x 2" lg. hex. bolts (item 4) must be inserted in the male hitch bushings (item 2) from the back of the subframe (item 1) as shown on figures 7a and 7b.

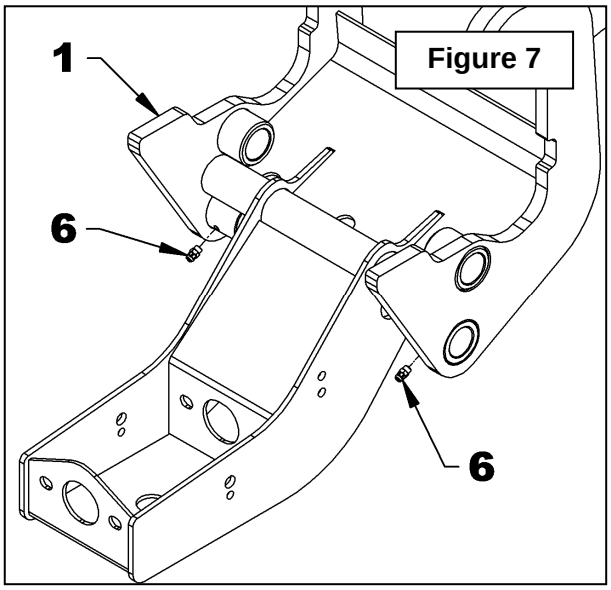

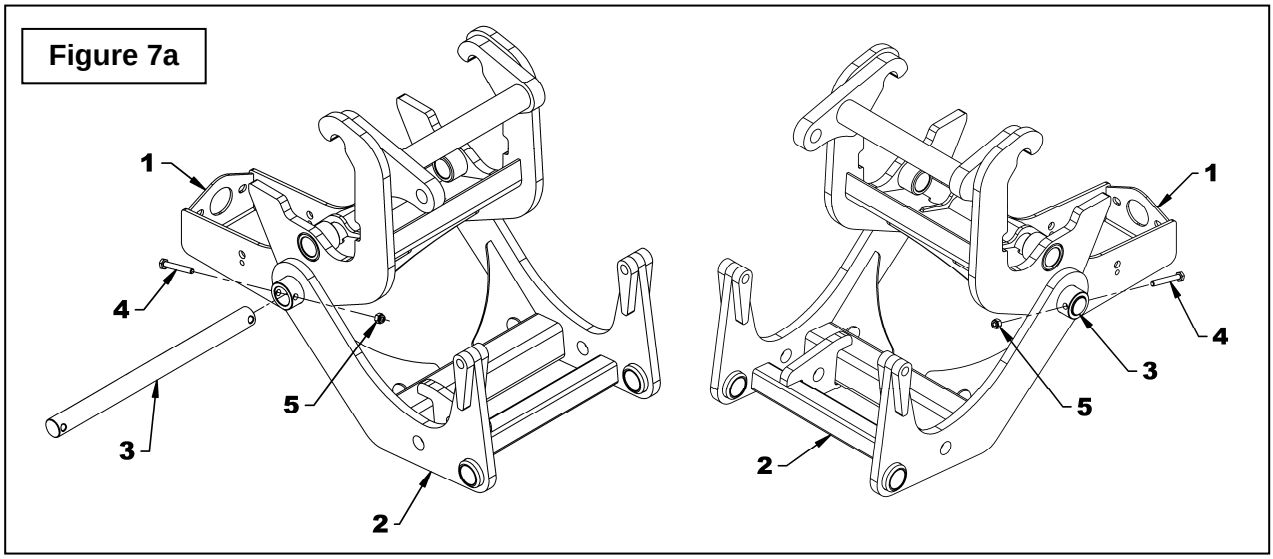

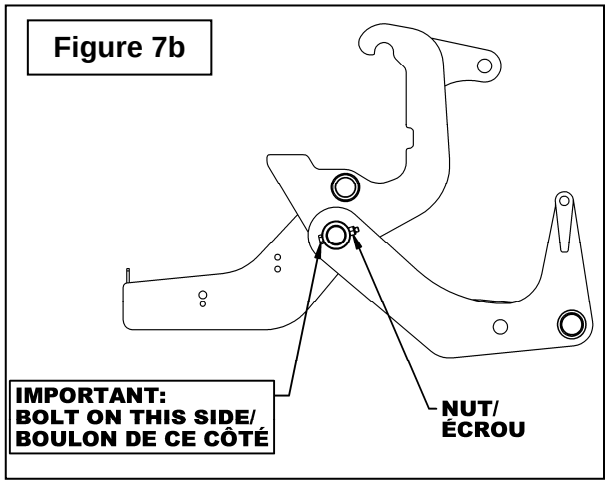

N°	DESCRIPTION	QTY
1	Subframe	1
2	Male quick hitch	1
3	Pin Ø1" X 13 3/4" lg., PTD	1
4	Hex. bolt 1/4"NC x 2" lg., PTD	1
5	Nylon insert nut 1/4"NC, PTD	1
6	Grease fitting 1/4"NF	2

ASSEMBLY

Installation of the Hydraulic Cylinder

1. Gather the items listed in the table of figure 8.
2. **Figure 8:** Apply grease on the Ø3/4" x 2 1/2" lg. pin (item 6A) and attach the rod end of the cylinder (item 5) to the subframe support (item 1) with the pin (item 6A) and two 3/16" x 1 1/2" lg. cotter pins (item 6B) supplied with the cylinder.

   IMPORTANT: The cylinder ports must be placed as shown on figure 8.
3. **Figure 8:** Remove and discard the Ø3/4" x 2 1/2" lg. pin and the two Ø3/16" x 1 1/2" lg. cotter pins from the other end of the cylinder (item 5). Apply grease on the Ø3/4" x 3 1/2" lg. pin (item 4) and attach the cylinder to the male hitch support (item 2) (item 4) securing with two Ø3/16" x 1 1/2" lg. cotter pins (item 3).

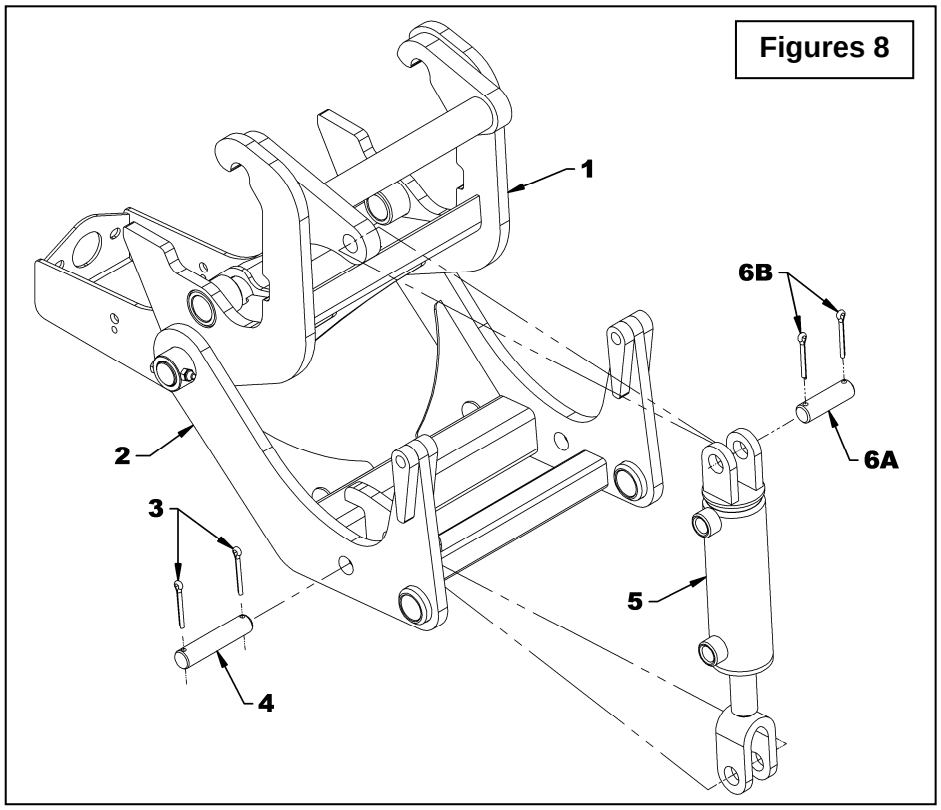

N°	DESCRIPTION	QTY
1	Subframe	1
2	Male quick hitch	1
3	Cotter pin Ø3/16" X 1 1/2"	2
4	Pin Ø3/4" X 3 1/2" lg., PTD	2
5	Hydraulic cylinder 2" x 5"	1
6A	Pin Ø3/4" X 2 1/2" lg. (included with the cylinder)	N/A
6B	Cotter pin Ø3/16" X 1 1/2" lg. (included with the cylinder)	N/A

ASSEMBLY

Installation of the Output Shaft

1. Gather the items listed in the table of figure 9.
2. **Figures 9-9a:** Make sure the subframe's side plates are clean and install the two decals "DANGER" #799 (item 7) as shown on figures 9 and 9a.
3. **Figure 9:** Attach without tightening the two bearings (item 8) to the subframe (item 2) with four 3/8"NC x 1 1/2" lg. hex. bolts, 3/8" lockwashers and 3/8"NC hex. nuts (items 3-6-5).

   NOTE: Make sure the bearing grease fittings are positioned as shown on figure 9.
4. **Figure 9:** Temporarily remove the four bearing setscrews (item 8a) and insert the 1" x 14 7/8" lg. output shaft (item 9) in the rear bearing (item 8), 1 1/4" x 5/8" lg. square bar (item 1) and through the last bearing (item 8).
5. **Figure 9a:** Position the end of the output shaft with the longest splines (item 9) at 5 15/16" from the rear bearing (item 8) as shown on figure 9a.
6. **Figure 9:** Apply thread sealant (Loctite #243) in the bearing threaded holes (item 8) and on the threads of the four setscrews (item 8A) and tighten firmly on the bearings.

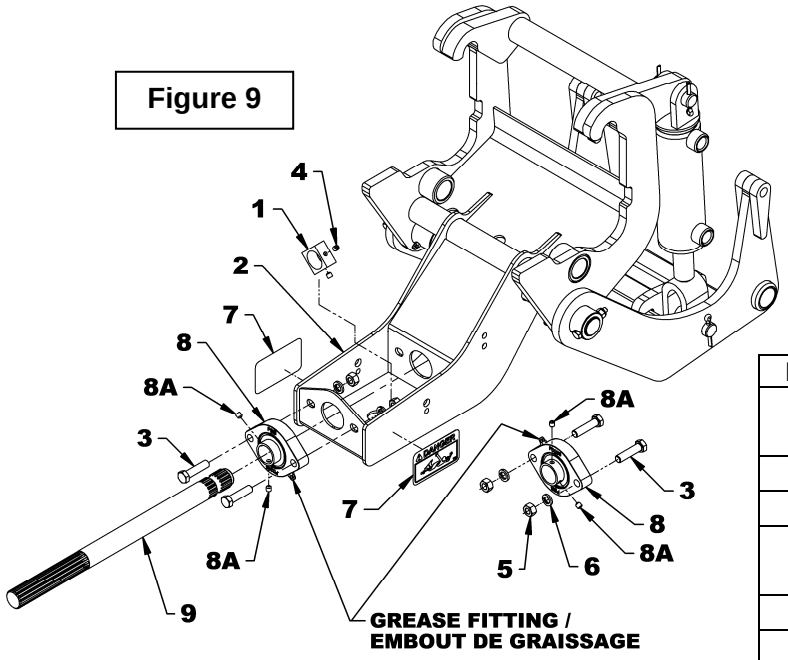

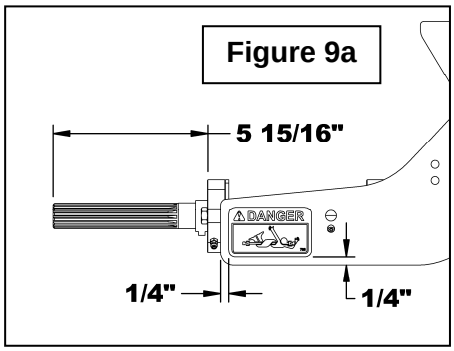

N°	DESCRIPTION	QTY
1	Square bar 1 1/4" X 5/8" lg, PTD	1
2	Subframe	1
3	Hex. bolt 3/8"NC x 1 1/2" lg.	4
4	Setscrew 1/4"NF X 1/4" lg, black	2
5	Hex. nut 3/8"NC	4
6	Lockwasher 3/8"	4
7	Decal "DANGER" #799	2
8	Bearing 1"	2
8A	Setscrew 1/4"NF X 1/4" lg, black	4
9	Output shaft 1" X 14 7/8" lg	1
10	Rotation sensor **Not included**	1
11	Hex. bolt 1/4"NC X 3/4" lg, PTD	1
12	Nylon insert nut 1/4"NC	1
13	Flat washer Ø11/32" ID X 1 1/2" OD, PTD	1
N/A	Thread sealant (Loctite #243) **not included**	---

ASSEMBLY

7. **Figures 9b:** Attach the rotation sensor **<u>not included</u>** (item 10) to the subframe (item 2) with the 1/4"NC x 3/4" lg. hex. bolt (item 11) and the 1/4"NC nylon insert nut (item 12).

8. **Figures 9-9b:** Place the square bar (item 1) opposite the rotation sensor (item 10). Apply thread sealant (Loctite #243) in the threaded holes of the square bar (item 1) and on the setscrew threads (item 4) and tighten firmly on the square bar.

9. **Figure 9b-9c:** Place the 1 1/2" ext flat washer (item 13) between the rotation sensor (item 10) and the output shaft (item 9). Turn the output shaft (item 9) and adjust by laterally moving it (see figure 9c) so that the space between the square bar (item 1) and the rotation sensor (item 10) is at a distance corresponding to the thickness of the 1 1/2" ext flat washer (item 13).

   <u>IMPORTANT:</u> Make sure there's no contact between the rotation sensor and the square bar.

10. **Figures 9:** Tighten the four 3/8"NC x 1 1/2" lg. hex. bolts (item 3) according to the torque specification table at the end of the manual.

    <u>NOTE</u>: Keep the 1 1/2" ext flat washer (item 13) in case future adjustments are required.

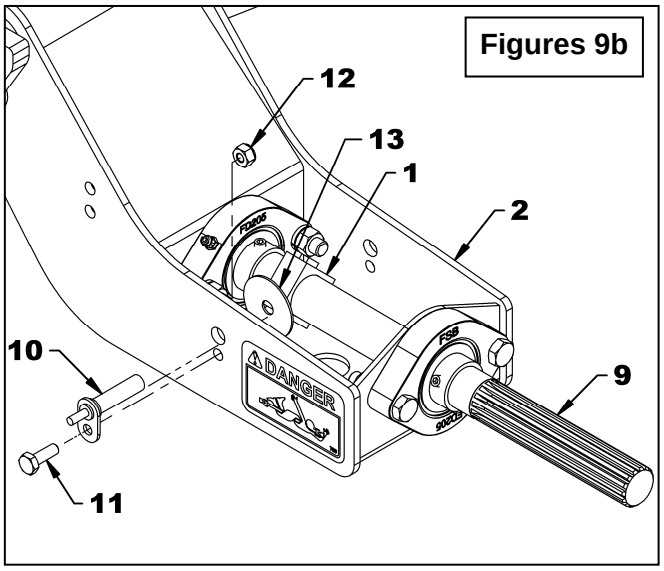

Figures 9b

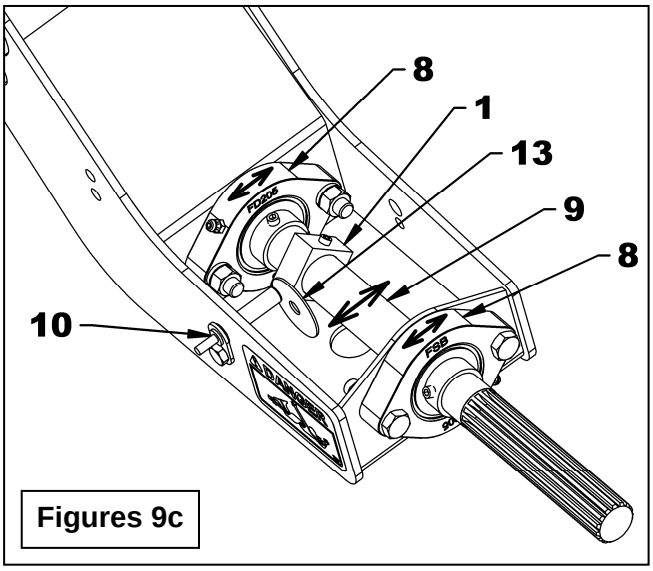

Figures 9c

ASSEMBLY

Installation of the Subframe Assembly on the Tractor

1. Gather the items listed in the table of figure 10.
2. **Figure 10:** Place the subframe assembly (item 3) in front of the tractor so that the subframe hooks (item 3A) are about 6" from the front of the tractor.
3. **Figure 10:** Position yourself facing the subframe (item 3) and place your hands under the subframe tube (item 3B). Lift and place the subframe hooks (item 3A) on the Ø1" pin (item 4) on the front of the tractor.
4. **Figure 10:** Secure the subframe (item 3) to the supports (items 5 et 6) with the Ø1" x 14 3/4" lg. "L" pin (item 1) and 3/16" linch pin (item 2).

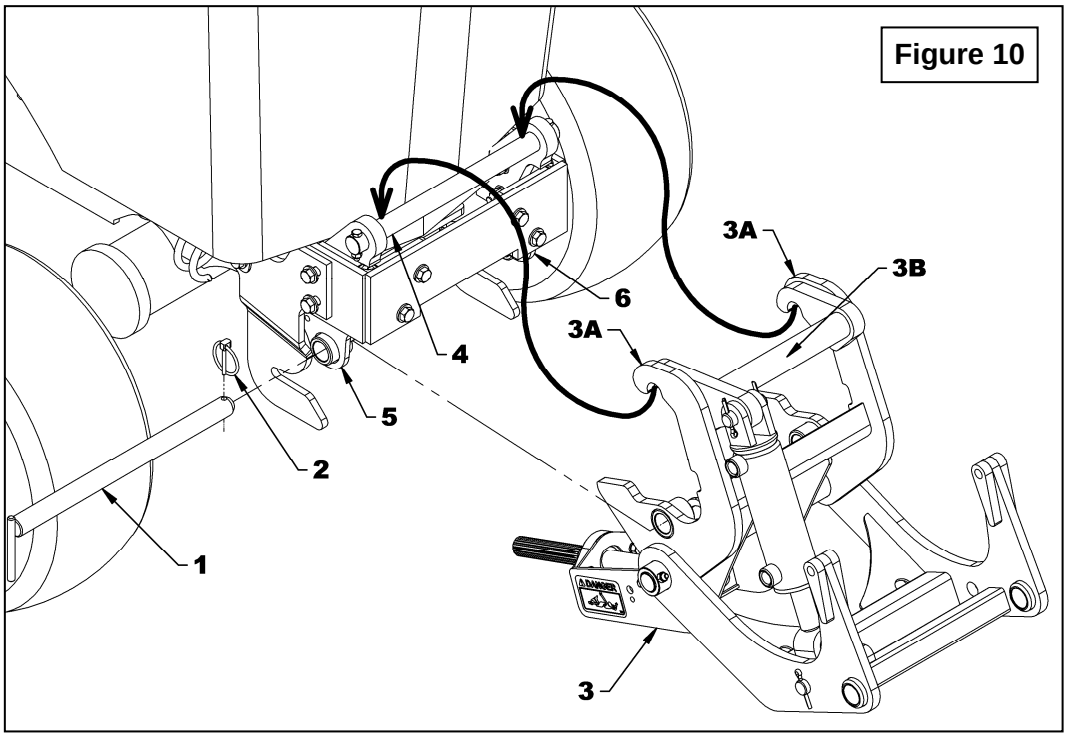

N°	DESCRIPTION	QTY
1	"L" pin Ø 1" x 14 3/4" lg.	1
2	Linch pin 3/16" lg.	1
3	Subframe and male hitch assembly	1
4	Pin Ø 1" x 13 3/4" lg	1
5	Left support	1
6	Right support	1

ASSEMBLY

Installation Of Hydraulic Components

1. Gather the items listed in table of figure 11.

IMPORTANT: For detailed instructions to assemble the hydraulic components refer to the section "Adapter Installation Process" at the end of the manual.

2. **Figure 11-11a:** Apply thread sealant (Teflon tape) to the male section of the two 90° 3/8"NPT male x 3/8"NPT female elbows (item 4) and screw in the cylinder ports (items 8A et 8B) positioning the elbows as shown on **figure 11a**.

3. **Figure 11:** Apply thread sealant (Teflon tape) on the 53" hoses 3/8"NPT male threads (item 2) and connect to the two elbows on the cylinder (item 8).

4. **Figure 11:** Attach the two 90° 1/4"NPT male/pivoting female elbows (item 3) on the other end of the hoses (item 2).

5. **Figure 11:** Apply thread sealant (Teflon tape) to the male end of the 90° elbows (item 3), install the red and blue identification rings (items 6A et 7A), dust caps (item 1) and attach the two 1/4"NPT male quick couplers (item 5). The blue identification ring must be associated with the lower cylinder port (item 8A) and the red one to the upper port (item 8B).

Figure 11

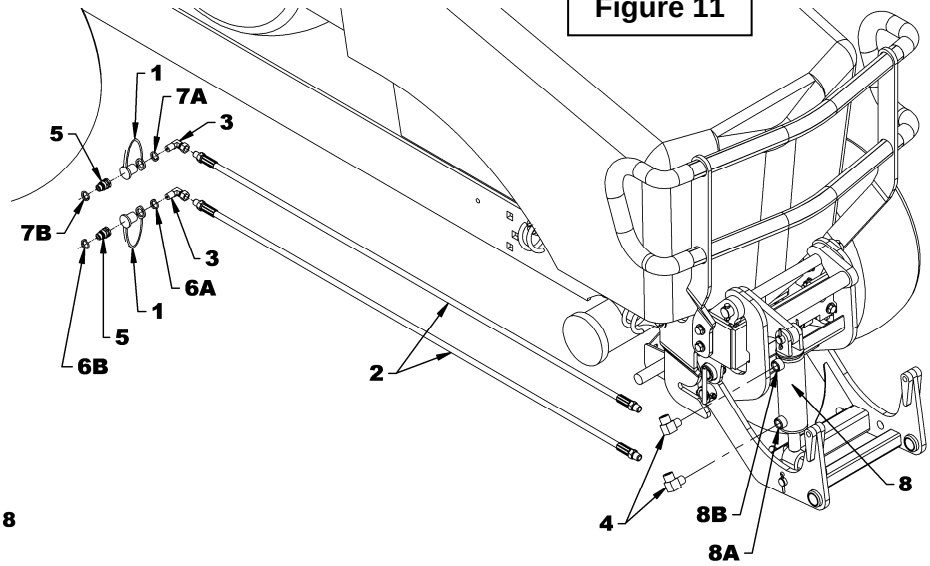

Figure 11a

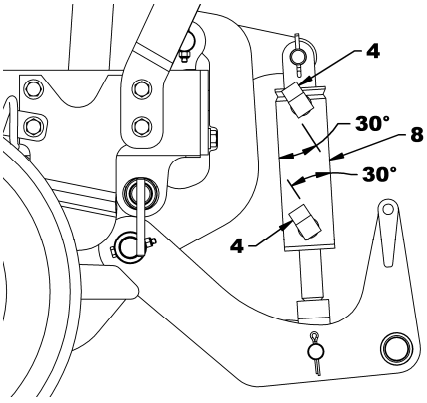

N°	DESCRIPTION	QTY
1	Dust cap 1/4"	2
2	Hydraulic hose 1/4" X 53" LG.	2
3	Elbow 90°, 1/4"NPT R.M./P.F.	2
4	Elbow 90°, 3/8" NPT R.M. x 3/8" NPT R.F.	2
5	Male quick coupler 1/4"NPT	2
6	Identification ring - blue	2
7	Identification ring - red	2
8	Hydraulic cylinder 2" X 5"	1
N/A	Thread sealant – Teflon tape (not included)	---

ASSEMBLY

Installation of Hose Support

1. Gather the items listed in the table of figure 12.
2. **Figure 12:** Attach the hose support (item 2) on the tractor frame (item 1) where shown with a 3/8"NC x 1 1/4" lg hex bolt (item 3), two 3/8" flat washers (item 6), a 3/8" lockwasher (item 5) and a 3/8"NC hex nut (item 4).

   Note: The hose support (item 6) must be placed at an angle of 15° as shown on figure **figure 12a**.

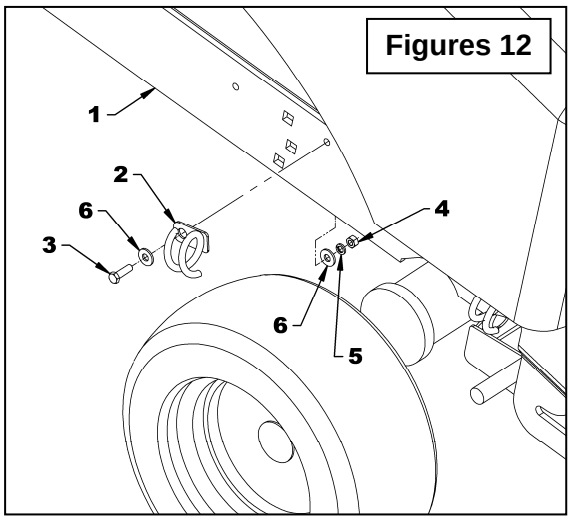

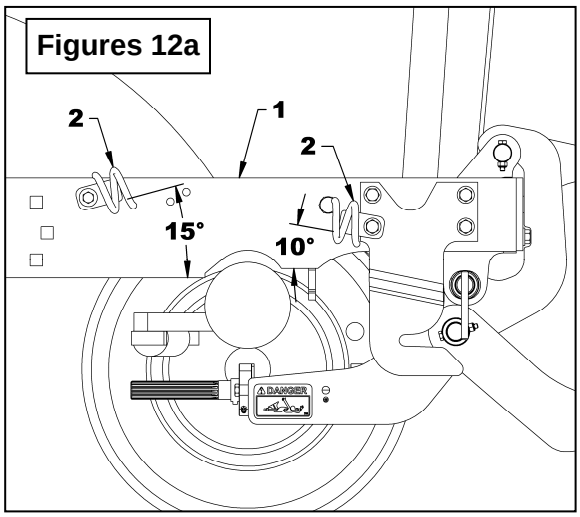

N°	DESCRIPTION	QTY
1	Tractor frame	1
2	Hose support	1
3	Hex. bolt 3/8"NC x 1 1/4" lg	1
4	Hex. nut. 3/8"NC	1
5	Lockwasher 3/8"	1
6	Flat washer 3/8"	2

ASSEMBLY

Connecting the Hydraulic Hoses to the Tractor

1. Gather all the items listed in the table of figure 13.
2. **Figure 13:** Insert the hoses (items 1-2) in the two hose supports (item 3). Connect the upper cylinder hose (item 2) to the lower exterior coupler of the tractor valve and the lower cylinder hose (item 1) to the upper exterior coupler of the valve as shown on **figure 13.**

Important: Make sure the couplers are clean before connecting them.

3. **Figure 13a:** Install the blue identification rings (item 4) and the red ones (item 5) where shown on **figure 13a**.
4. **Figure 13a:** Secure the two hydraulic hoses with the 8" lg. x 4.8mm nylon tie wraps (item 6) where shown on **figure 13a** and cut the excess length.

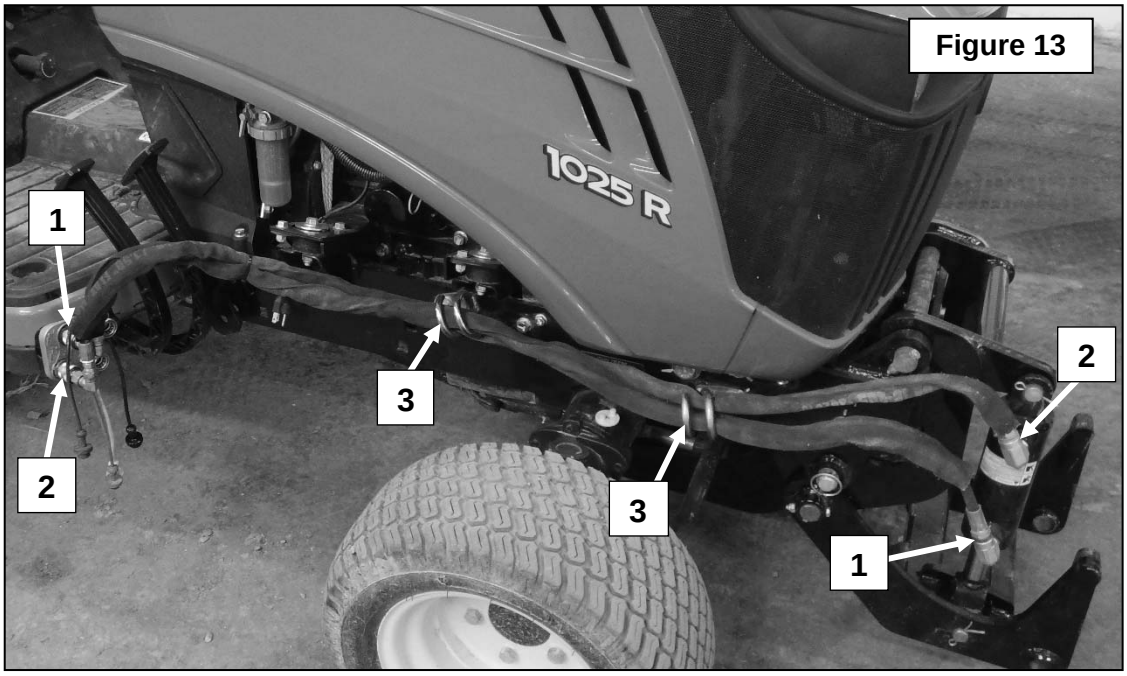

Figure 13

N°	DESCRIPTION	QTY
1-2	Hydraulic hose	2
3	Hose support	2
4	Identification ring - blue	2
5	Identification ring - red	2
6	Tie wraps 8" LG. X 4.8MM	2

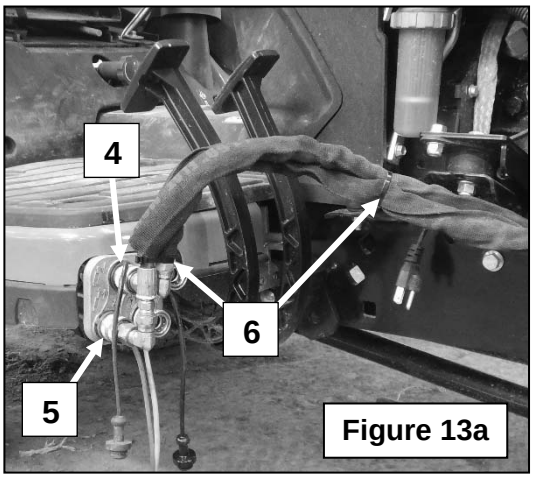

Figure 13a

ASSEMBLY

Installation of the Driveline

1. **Figure 14:** After completing the installation of the subframe on the tractor attach the longest yoke of the fixed driveline (item 1A) to the tractor's output shaft (item 2).
2. **Figure 14:** Disengage the locking collar (item 1) by pulling it back and push on the yoke (item 1d) to connect the driveline to the tractor PTO (item 3). Release the yoke and make sure the locking collar is back in its proper position. Pull and push on driveline to make sure it's securely locked.

⚠ **WARNING: To avoid serious injury or death: Make sure that the quick connect yoke is securely locked in place. A "click" must be heard.**

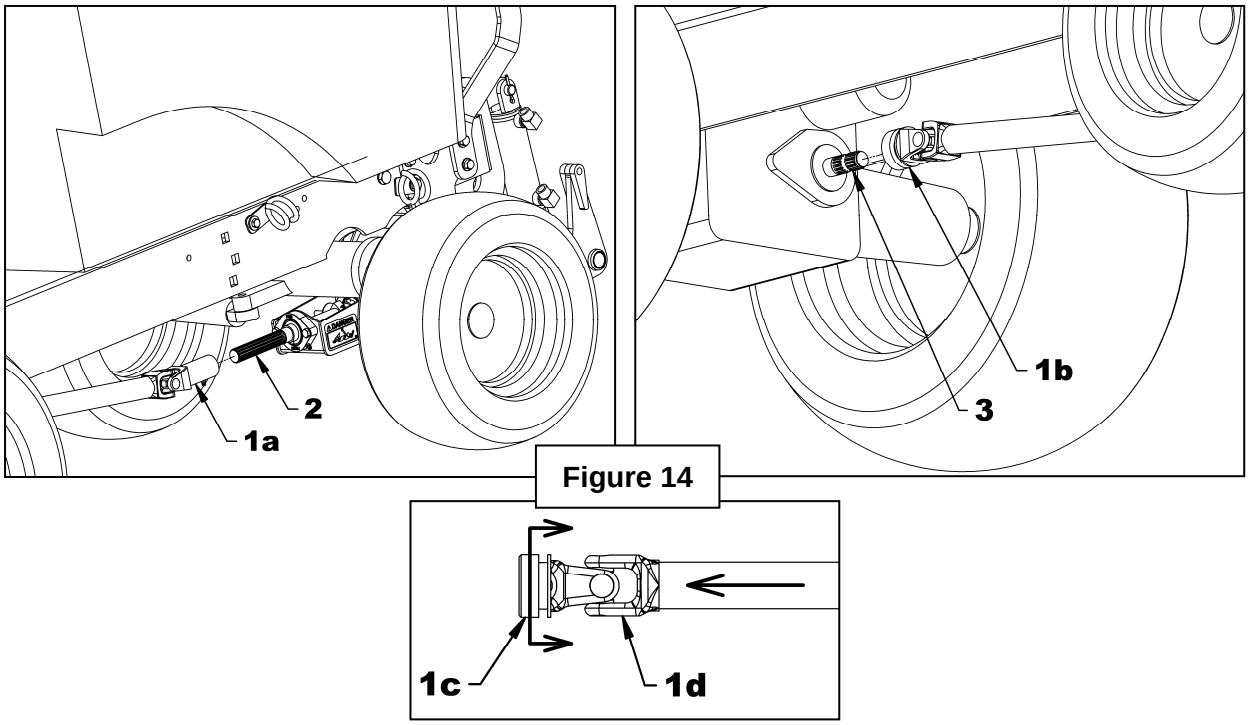

Figure 14

OPERATION

GENERAL PREPARATION

1. Make sure the equipment driveline is properly secured
2. Make sure the equipment is operating freely.

WARNING: To avoid serious injurious or death:

- **Never allow anyone near the work area.**
- **Never allow anyone to climb on the equipment or the subframe.**
- **Before cleaning, adjusting or repairing the equipment or subframe, immobilize the tractor, wait for the complete stop of the moving parts, set the parking brake, lower the equipment to the ground, shut off the engine and remove the ignition key.**
- **Never place any part of your body under the equipment when making adjustments.**

WARNING
Always operate the equipment from the tractor seat.

WARNING
Operate the equipment at a speed that corresponds to the work area conditions. Be careful when working near a slope or on uneven ground.

WARNING
Always wear safety glasses when operating the equipment.

OPERATION

Note: The rotation sensor must be installed to be able to back up the tractor when in operation with the snowblower.

Controls

The front loader hydraulic valve lever controls the movements of the hitch and equipment installed.

- To RAISE the hitch and equipment, pull on the valve lever.
- To LOWER the hitch, push slightly on the valve lever.
- To place the equipment in FLOAT mode, push on the valve lever completely until it engages and remains in that position. The float mode allows the equipment to follow ground contours when the tractor is moving.

IMPORTANT: Always use float mode when operating the snowblower. It is however possible to momentarily lock the position of the snowblower when working in an area where the snow has hardened such as roadsides.

OPERATION

Procedure for Connecting and Disconnecting the Equipment

PRECAUTIONS TO FOLLOW BEFORE EACH CONNECTION

1. Make sure the area is clear of any object that could interfere with the connection.
2. Make sure the maintenance of the hitch and snowblower is up to date.
3. Make sure the drive system of the of the snowblower is functional and that there is no residue, snow or ice that would impede operation.
4. **Figures 15:** Make sure the drivelines and the hitches connection points (items 1A, 1B, 2A, 2B) are clean and not covered iwth snow or ice.
5. **Figure 15:** Make sure the 2 pins of the snowblower hitch (item 3) and the two round wire lock pins (item 4) are installed on the snowblower housing.
6. **Figure 15:** Make sure the snowblower driveline (item 5) is secure on the guard's "U" support (item 6).
7. **Figure 15:** Make sure the male driveline (item 7) is placed on top of the snowblower female hitch.
8. Follow the security measures for operating the tractor.
9. Make sure the tractor PTO is disengaged.

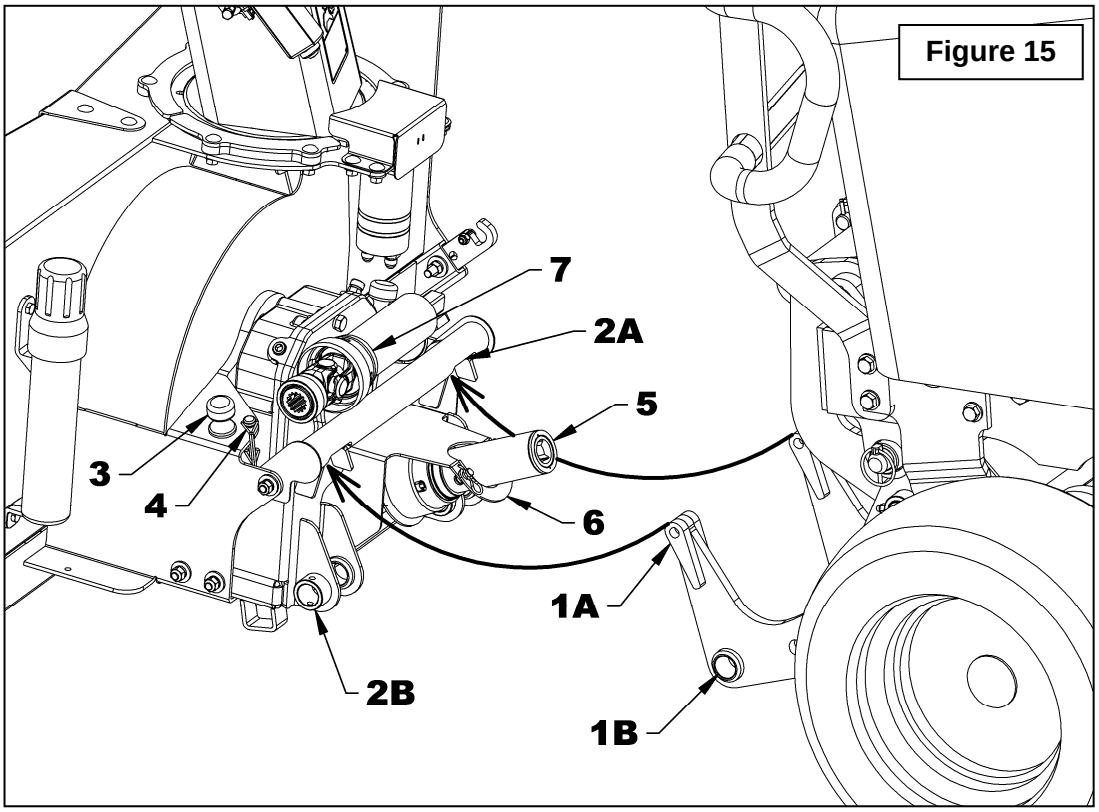

Figure 15

OPERATION

PROCEDURE TO FOLLOW TO CONNECT THE SNOWBLOWER

IT'S IMPORTANT TO FOLLOW THESE STEPS IN THE ORDER INDICATED.

Step 1

Figure 15 : Start the tractor, remove the parking brake and advance slowly making sure to align the snowblower female hitch with the male hitch of the tractor. Lower the tractor male hitch enough so the two upper hooks (item 1A) can be inserted in the openings of the female hitch (item 2A).

Step 2

Figure 15: With the hydraulic control lever, raise the snowblower completely to correctly position the snowblower hitch with the tractor hitch. This will make it possible for the male hitch bushings (item 1B) to properly align with the female hitch bushings (item 2B).

⚠ **WARNING: To avoid serious injuries or death: always engage the lock of the tractor control lever, set the parking brake et turn off the engine before stepping down from the tractor to connect or disconnect the equipment.**

Step 3

Figure 16: Insert the two snowblower hitch pins (item 8) in the bushings (item 9) and secure with the 1/4" x 1 3/4" round wire lock pins (item 10).

Step 4

Figure 17 : Remove the "U" support (item 11) holding the snowblower driveline and attach it to the welded pins (item 12) in the opposite direction (upwards) with the two 2.5mm x 40mm hairpins (item 13).

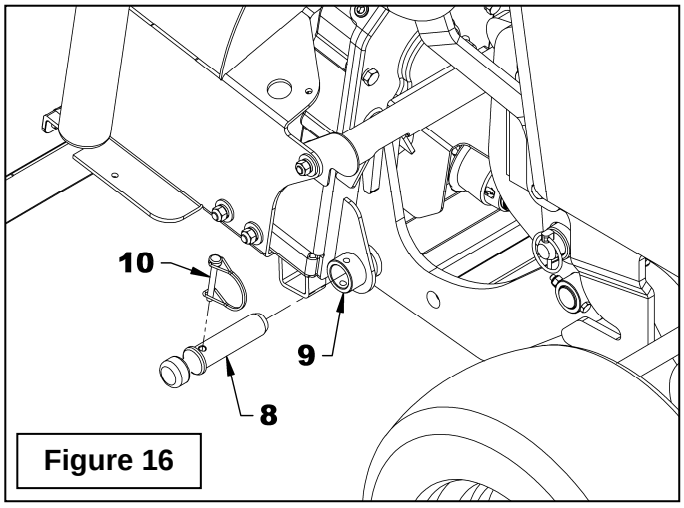

Figure 16

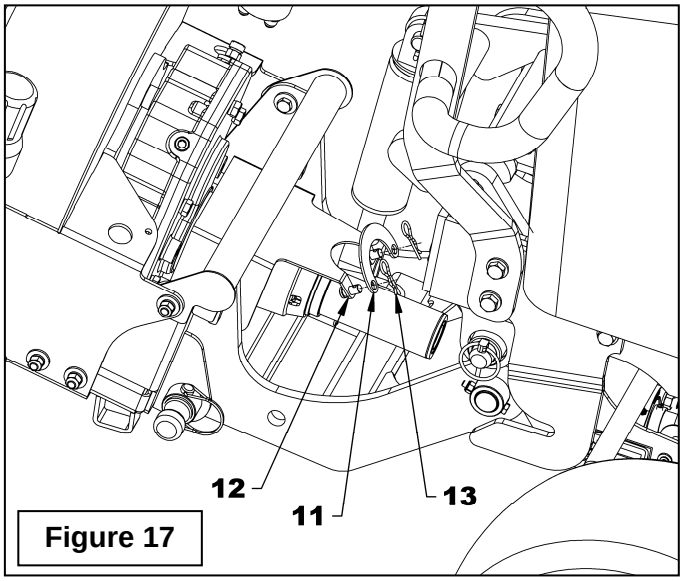

Figure 17

Step 5

Figures 18-19: Place the male driveline (item 14) under the subframe (item 16) and insert in the snowblower female driveline (item 15). Attach the male driveline (item 14) to the subframe output shaft (item 17). To do so, disengage the locking collar (item 14a) by pulling it back and push on the yoke (item 14b) to connect the driveline to the subframe output shaft (item 17). Release the yoke and make sure the locking collar is back in its proper position. Pull and push on driveline (item 14) to make sure it's securely locked.

WARNING: To avoid serious injury: Make sure that the quick connect yoke is securely locked in place. A "click" must be heard.

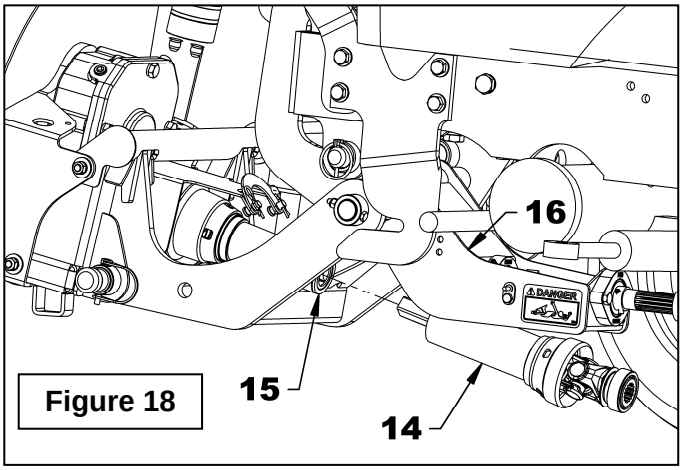

Figure 18

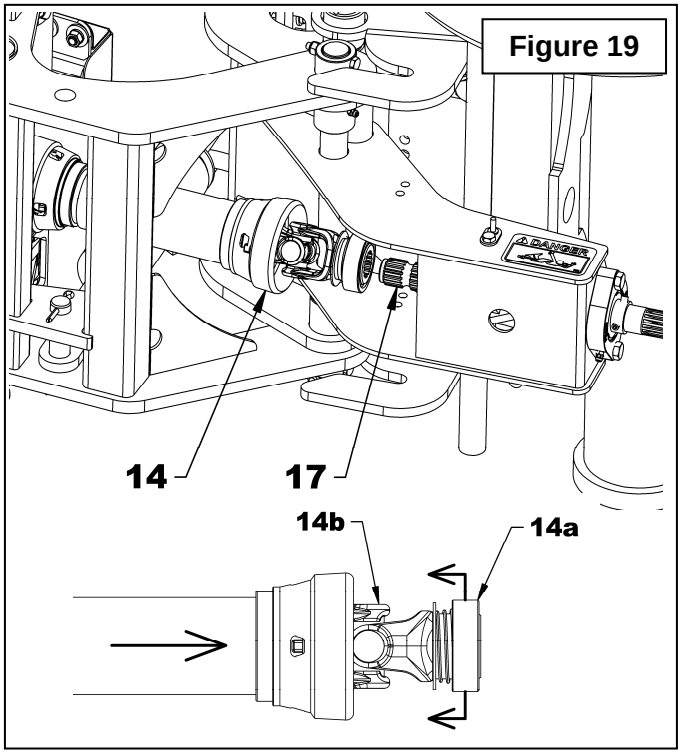

Figure 19

Step 6

Figure 20 : Place the hoses (items 1a-1b) in the two hose supports (item 2) and connect the snowblower hydraulic couplers and the electric connectors to the tractor couplers and connectors as shown on **figure 20**. Secure the two hoses with three tie wraps (item 3) and the two hose protectors (item 4) where shown on **figure 20**.

IMPORTANT: Make sure the hydraulic couplers and electric connectors are clean before connecting them.

Step 7

With the hydraulic control lever lower the snowblower to the ground.

Step 8

Adjust the engine speed to **low rpm** and engage the PTO. Increase engine speed gradually until it is at full throttle before beginning to use the snowblower.

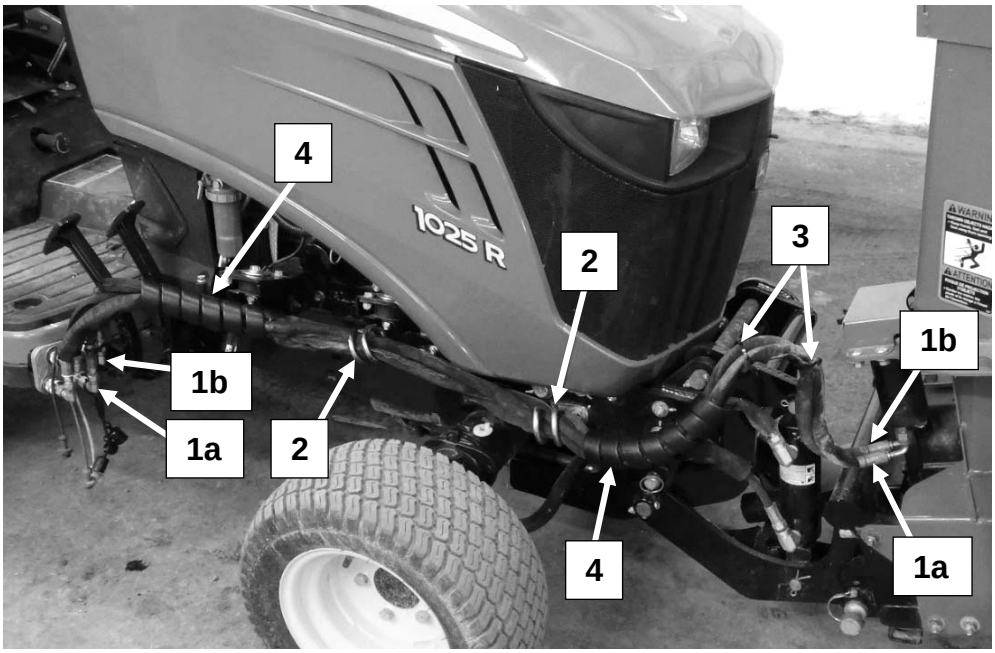

Figure 20

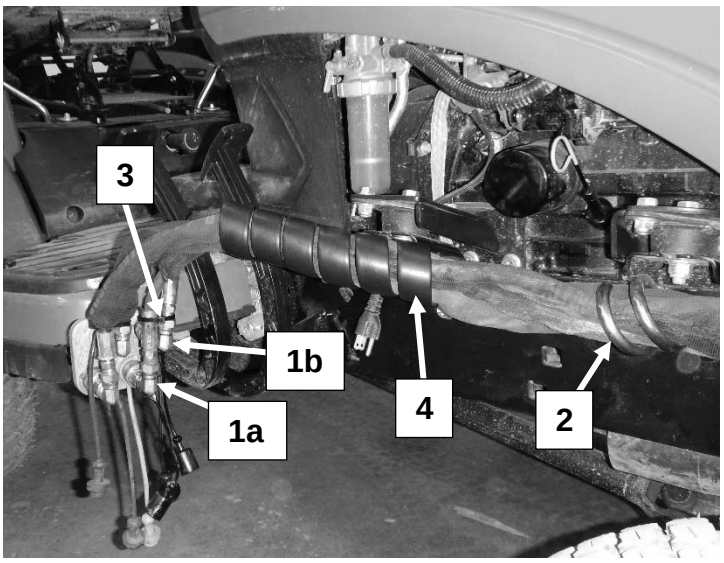

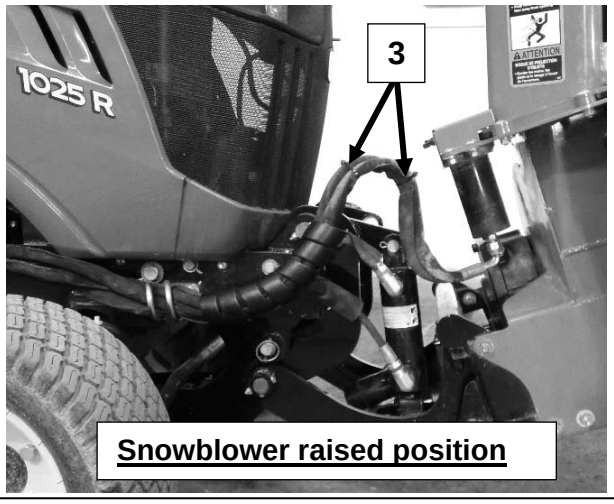

Snowblower raised position

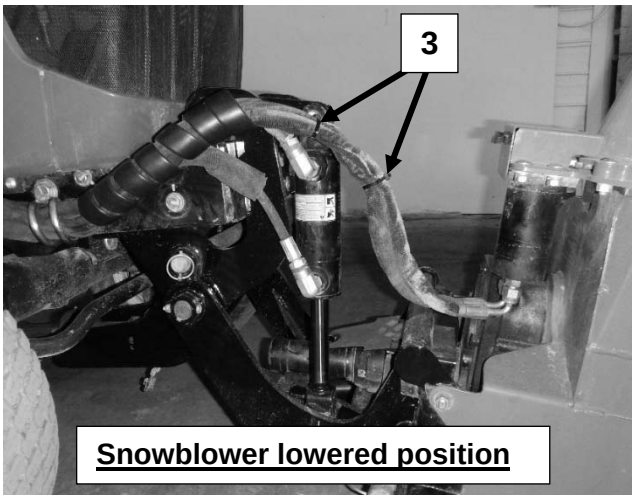

Snowblower lowered position

OPERATION

PRÉCAUTIONS TO FOLLOW BEFORE EACH DISCONNECTION

1. Make sure the area is clear of any object that could interfere with the disconnection.
2. Follow the security measures for operating the tractor.
3. Make sure the tractor PTO is disengaged.

PROCEDURE TO FOLLOW TO DISCONNECT THE EQUIPMENT

IT'A IMPORTANT TO FOLLOW THESE STEPS IN THE ORDER INDICATED.

Step 1

Start the tractor and raise the snowblower completely using the hydraulic control lever.

WARNING: To avoid serious injuries or death: always engage the lock of the tractor control lever, set the parking brake et turn off the engine before stepping down from the tractor to connect or disconnect the equipment.

Step 2

Figure 21: Disconnect the hydraulic couplers and electric connectors, roll up together the hoses (item 1) and wires and wrap around the chute (item 2) as shown on figure 21.

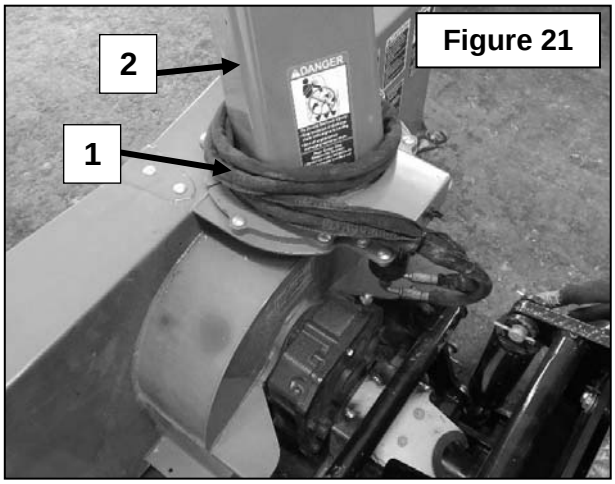

Figure 21

Step 3

Figures 22-23 : Remove the subframe male driveline (item 1) and place it between the tube of the female hitch and the gearbox as shown on figure 23.

Step 4

Figure 23: Remove the guard's "U" support (item 3) and attach it in the opposite direction (downwards) with the two 2.5mm x 40mm hairpins (item 4) to support the snowblower driveline.

Step 5

Figure 23: Remove round wire lockpins (item 5) and the two snowblower hitch pins (item 6) and insert them in the hole on the snowblower frame.

Step 6

Figure 23 : Lower the snowblower slowly to the ground with the tractor's control lever and detach the male hitch (item 8) from the snowblower hitch (item 7) by backing up slowly.

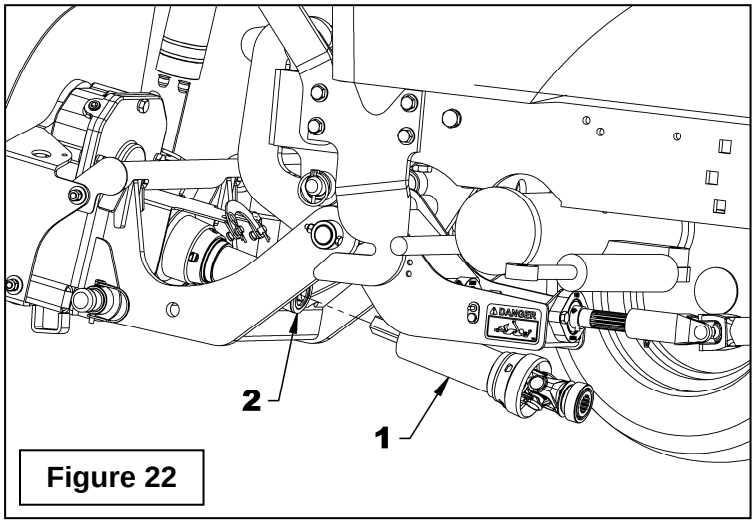

Figure 22

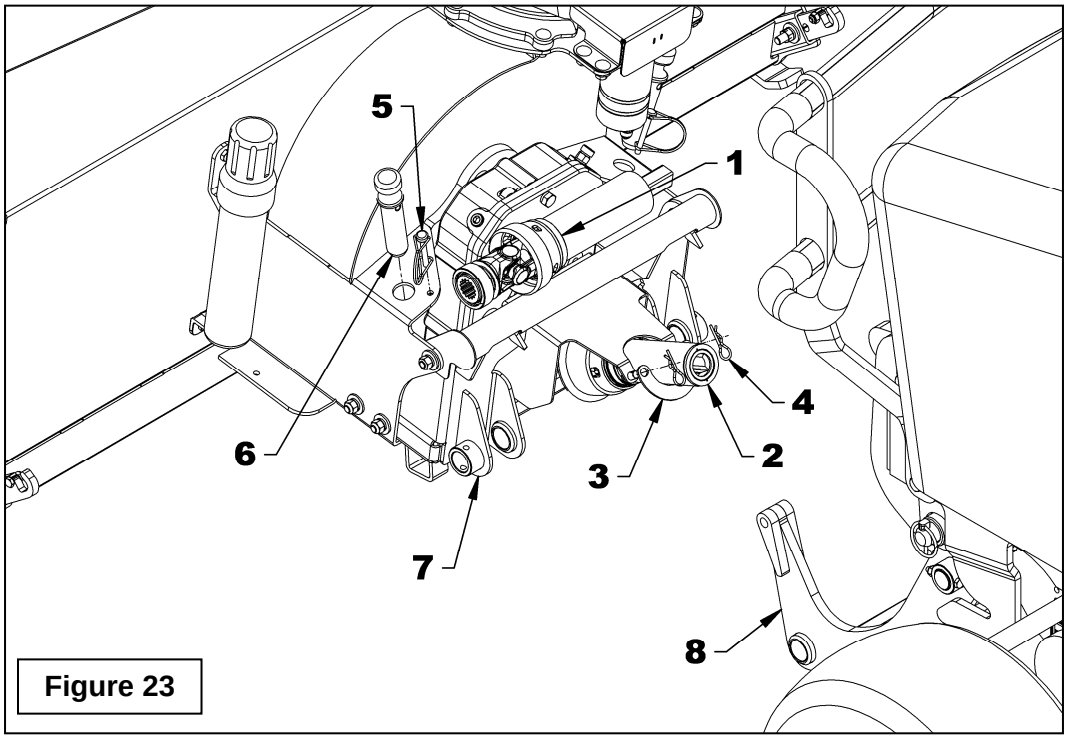

Figure 23

Removing the Subframe from the Tractor

WARNING: To avoid serious injury or death: Park the tractor on level ground, set to neutral, apply parking brake, disengage drive, place all control levers to neutral, shut off the engine, remove the ignition key and make sure all parts in rotation have stopped BEFORE removing the subframe from the tractor.

1. Remove the snowblower from the subframe by following the instructions in the previous section.
2. **Figure 24:** Disconnect the fixed driveline (items 1a-1b) from the tractor PTO (item 3) and the subframe output shaft (item 2).
3. **Figure 25:** Disconnect the hydraulic couplers (items 1-2) and install the dust caps.
4. **Figure 25:** Remove the two hoses from the hose supports (item 3).
5. **Figure 26:** Remove the linch pin (item 2) and the "L" pin (item 1) from the subframe and lift the subframe by the upper tube (item 3b) to unhook it from the tractor. Place the subframe on the ground.
6. **Figure 26:** Reinstall the "L" pin (item 1) and the linch pin on the subframe (item 2).
7. Roll up the hoses and place them on the subframe.

Figure 24

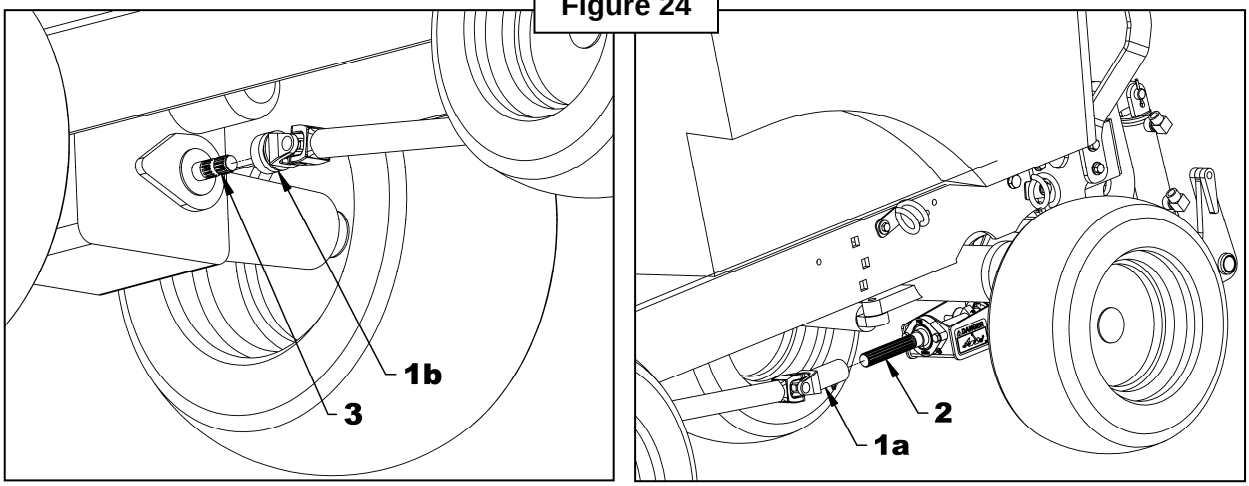

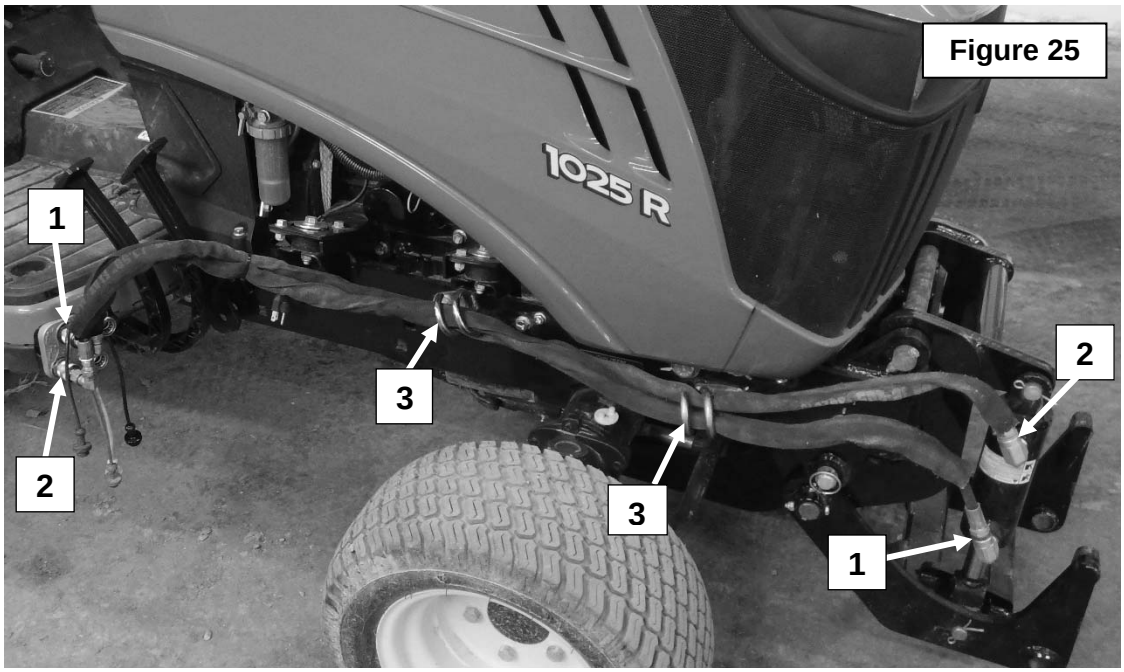

Figure 25

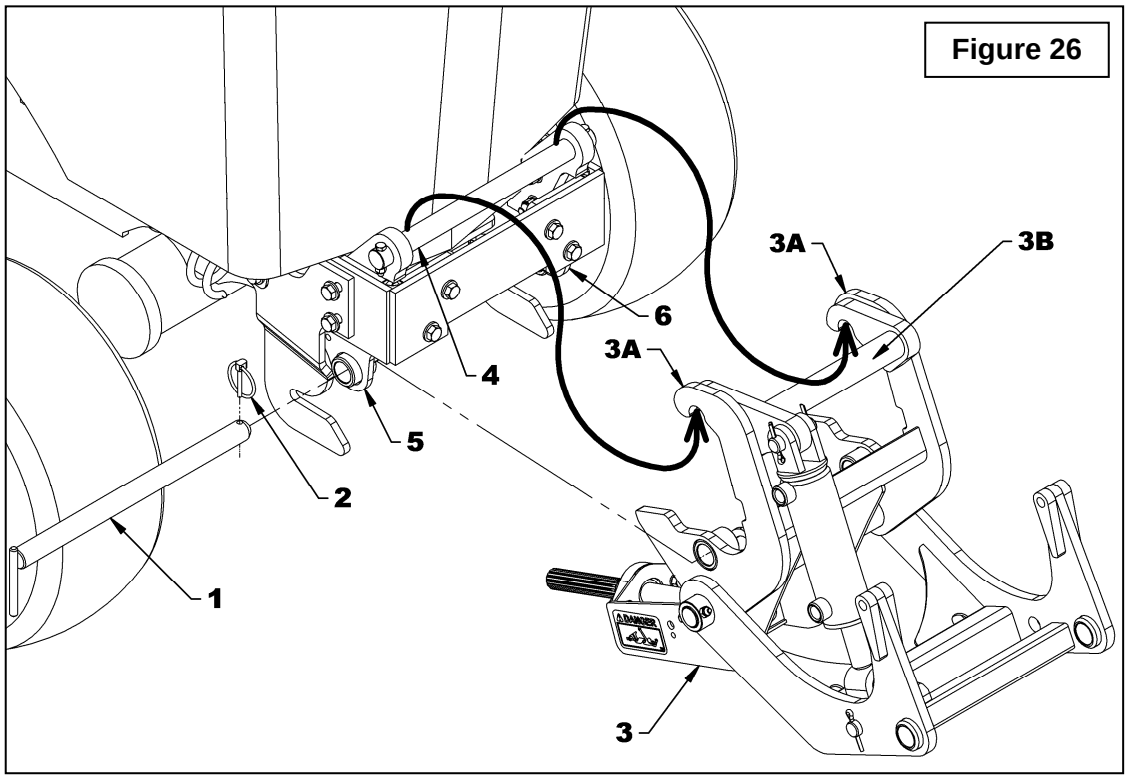

Figure 26

Reinstalling the Subframe on the Tractor

WARNING: To avoid serious injury or death: Park the tractor on level ground, set to neutral, apply parking brake, disengage drive, place all control levers to neutral, shut off the engine, remove the ignition key and make sure all parts in rotation have stopped BEFORE reinstalling the subframe from the tractor.

1. Place the subframe in front of the tractor so the subframe hooks are approximately 6" from the tractor.
2. **Figure 27 :** Remove the linch pin (item 2) and the "L" pin (item 1) from the subframe and lift the subframe by the upper tube (item 3b) to hook it on the front of the tractor.
3. **Figure 27 :** Attach the subframe to the front supports with the "L" pin (item 1) and the linch pin (item 2).
4. **Figure 28 :** Insert the hoses (items 1-2) in the two hose supports (item 3) and connect the quick couplers as indicated **figure 28**.

   IMPORTANT: Make sure the hydraulic couplers are clean before connecting them.
5. **Figure 29 :** Connect the fixed driveline (item 1) to the subframe output shaft (item 2) and the tractor PTO (item 3).

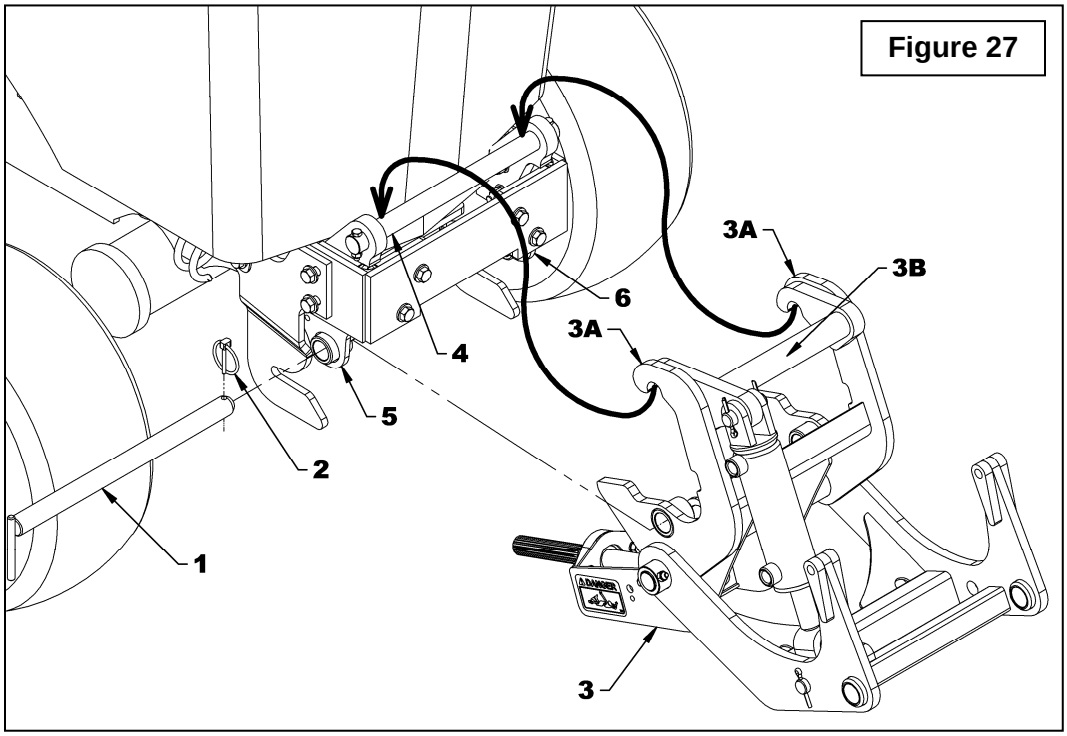

Figure 27

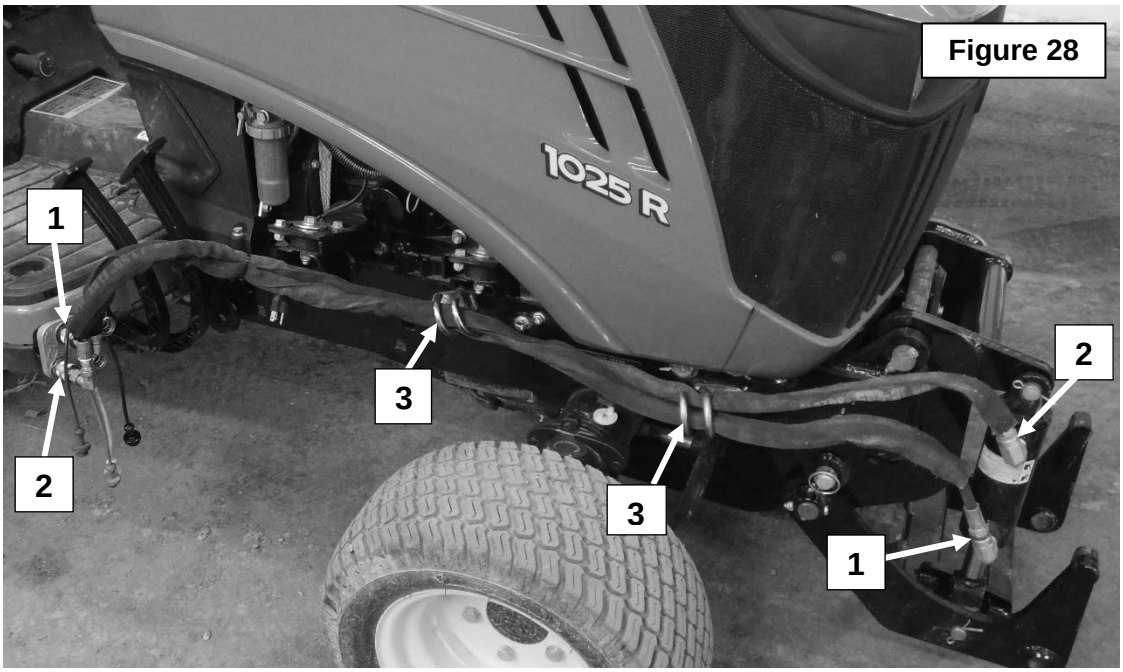

Figure 28

Figure 29

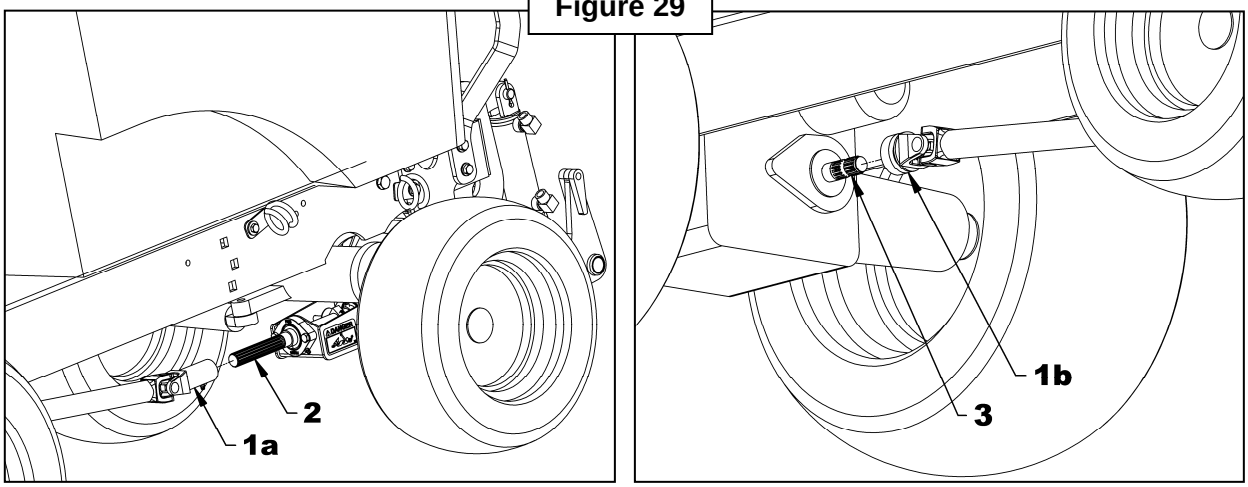

MAINTENANCE

IMPORTANT: Perform all the maintenance section without taking into account the hours given in the following cases:

1. At least once a year if the subframe and drive kit are used less than 20 hours annually.
2. Before each storage period.
3. After each wash.

MAINTENANCE SCHEDULE		
DESCRIPTION	**DESCRIPTION**	**DESCRIPTION**
Hardware	After the first 8 hours of operation 40 hours of operation	• Tightens all bolts and nuts according to the Torque Specification Table.
Connection points	Before each equipment connection	• Visual inspection of the clutch shaft, hydraulic/electric connectors and the hitch connection points. Clean if necessary.
Driveline telescopic joint	Before the fist use 40 hours of operation	• Grease the telescopic joint. • **Use a grease grade N.L.G.I. # 2 with a good thermal and** mechanical **stability that can be used in temperatures ranging from -50°C to 150°C (-58°Fto 302°F)** • Number of pumping cycles: 5
Driveline journal crosses	Before first use 40 hours of operation	• Grease the journal crosses. • **Use a lithium soap grease E.P. compatible grade N.L.G.I. # 2 and containing no more than 1% of molybdenum disulfide.** • Number of pumping cycles: 8-10
Pivot bushings of the hitch	20 hours of operation	• Grease the pivot bushings. • **Use a grease designated "Extreme Pressure" containing** molybdenum **disulfide. This grease should specify "Moly EP" on the label.** • Number of pumping cycles: 3-4
Flange bearings	Before first use 20 hours of operation	• Grease the flange bearings. • **Use a lithium soap grease E.P. compatible grade N.L.G.I. # 2 and containing no more than 1% of molybdenum disulfide.** • Number of pumping cycles: 3-4
Cylinder pins	Twice a year	• Clean and grease the pins and bushings. • **Use a grease designated "Extreme Pressure" containing molybdenum disulfide. This grease should specify "Moly EP" on the label.**
Hydraulic, electric and connection systems	After the first 8 hours 40 hours of operation	• Visual inspection to detect hydraulic leaks. Tighten, repair or replace if necessary. • Visual inspection of the electrical wiring and connectors. Repair or replace if necessary.

MAINTENANCE

LUBRICATION

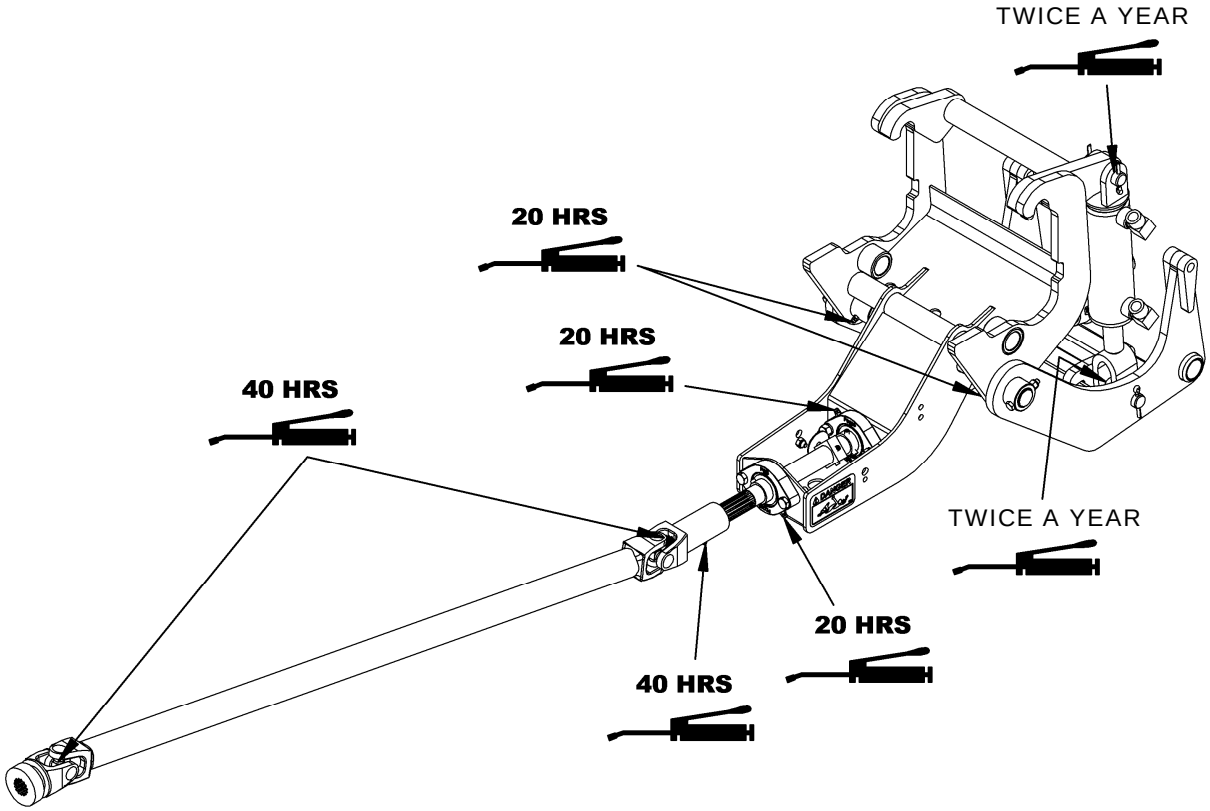

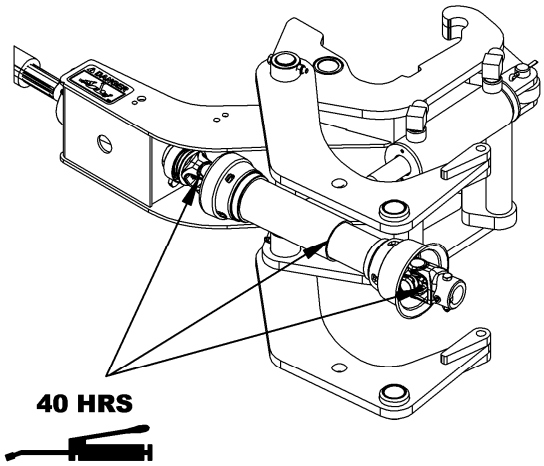

TROUBLE SHOOTING

PROBLEM	POSSIBLE CAUSE	CORRECTIVE MESURES
1. Hydraulic couplers are hard or impossible to connect.	• Hoses, tractor side, are pressurized.	• Turn the engine off and activate the valve control lever in all directions.
	• Female couplers (equipment side) are partially open. The small coupler balls are visible.	• Press on the elbow behind the coupler to reposition the coupler.
	• The hydraulic couplers are defective.	• Repair the couplers. • Replace the hydraulic couplers.
2. During operation of the mechanical drive, there is excessive vibration.	• There is accumulated residue or snow/ice on the drivelines.	• Clean male and female drivelines
	• One or more drivelines were deformed.	• Check the linearity of the drivelines and replace the deformed drivelines.

STORAGE

Before storing the subframe or implement, certain precautions should be taken to protect it from deterioration.

1. Clean the subframe and implement thoroughly.
2. Make all the necessary repairs.
3. Replace all safety signs that are damaged, lost, or otherwise become illegible. If a part to be replaced has a label on it, obtain a new safety label from your dealer and install it in the same place as on the removed part.
4. Repaint all parts from which paint has worn or peeled.
5. Lubricate the subframe and implement as instructed under **"Lubrication"** section.
6. When the subframe and implement are dry, oil all moving parts. Apply oil liberally to all surfaces to protect against rust.
7. Store in a dry place.

PARTS

HITCH AND SUBFRAME			
REF.	**DESCRIPTION**	**QTY**	**PART #**
1	Hose support	2	670319
2	Pin ø1" x 14 3/4" lg.	1	670730
3	Left support	1	671808
4	Right support	1	671809
5	Support reinforcement	1	671810
6	Subframe	1	671811
7	Male quick hitch	1	671812
8	Pin Ø1" X 13 3/4", PTD	2	671813
9	Hex. bolt 1/4"NC x 1 1/2" lg., Gr.5, PTD	2	0100007
10	Hex. bolt 1/4"NC x 2" lg., Gr.5, PTD	2	0100010
11	Hex. bolt 3/8"NC x 1 1/4" lg., Gr.5, PTD	1	0100039
12	Hex. bolt 7/16"NC x 1 1/2" lg., Gr.5, PTD	2	0100058
13	Hex. bolt 7/16"NC x 1 3/4" lg., Gr.5, PTD	4	0100059
14	Hex. bolt 7/16"NC x 2" lg., Gr.5, PTD	4	0100060
15	Hex. bolt 7/16" NC x 2 1/2" lg., Gr.5, PTD	4	0100061
16	Hex. bolt 1/2"NC x 1 3/4" lg., Gr.5, PTD	6	0100071
17	Hex. bolt 7/16"NC x 3 1/4" lg., Gr.5, PTD	4	0100175
18	Hex. nut 3/8"NC PTD	1	0900003
19	Nylon insert nut 1/4"NC, PTD	4	1000003
20	Nylon insert nut 7/16"NC, PTD	12	1000009
21	Nylon insert nut 1/2NC, PTD	2	1000011
22	Lockwasher 3/8", PTD	1	1200004
23	Lockwasher 7/16", PTD	12	1200005
24	Lockwasher 1/2", PTD	6	1200006
25	Flat washer 3/8" (ø7/16" INT.), PTD	2	1400004
26	Flat washer 1/2" (ø9/16" INT.), PTD	4	1400006
27	Flat washer 12mm (Ø13 INT.), PTD	28	1400030
28	Cotter pin Ø 3/16" X 1 1/2" LG.	2	1500013
29	Linch pin 3/16", PQE	1	1900004
30	Nylon tie wraps 8" lg. X 4.8mm, NOIR	2	2100003
31	Dust cap 1/4"NPT	2	2600052
32	Hose 1/4" x 53" lg., 1/4" NPT R-M X 3/8" NPT R-M 3000Psi	2	3700274
33	Pin Ø3/4" X 3 1/2" lg., PTD	1	4600019
34	Grease fitting 1/4" NF	2	654106
35	Elbow 90° 1/4"NPT M X1/4"NPT PIV. F	2	655211
36	Elbow 90°, 3/8" NPT R-M X 3/8" NPT R-F	2	655314
37	Male quick coupler 1/4"NPT	2	657094
38	Identification ring - red	2	658204
39	Identification ring - blue	2	658205
40	Cylinder 2" x 5"	1	665433
-	- Seal kit for cylinder 665433	2	665235
40a	- Pin 3/4" x 2 1/2" (included with cylinder)	4	1500013
40b	- Cotter pin 3/16" x 1 1/4" (included with cylinder)	1	665434

PARTS

HITCH AND SUBFRAME

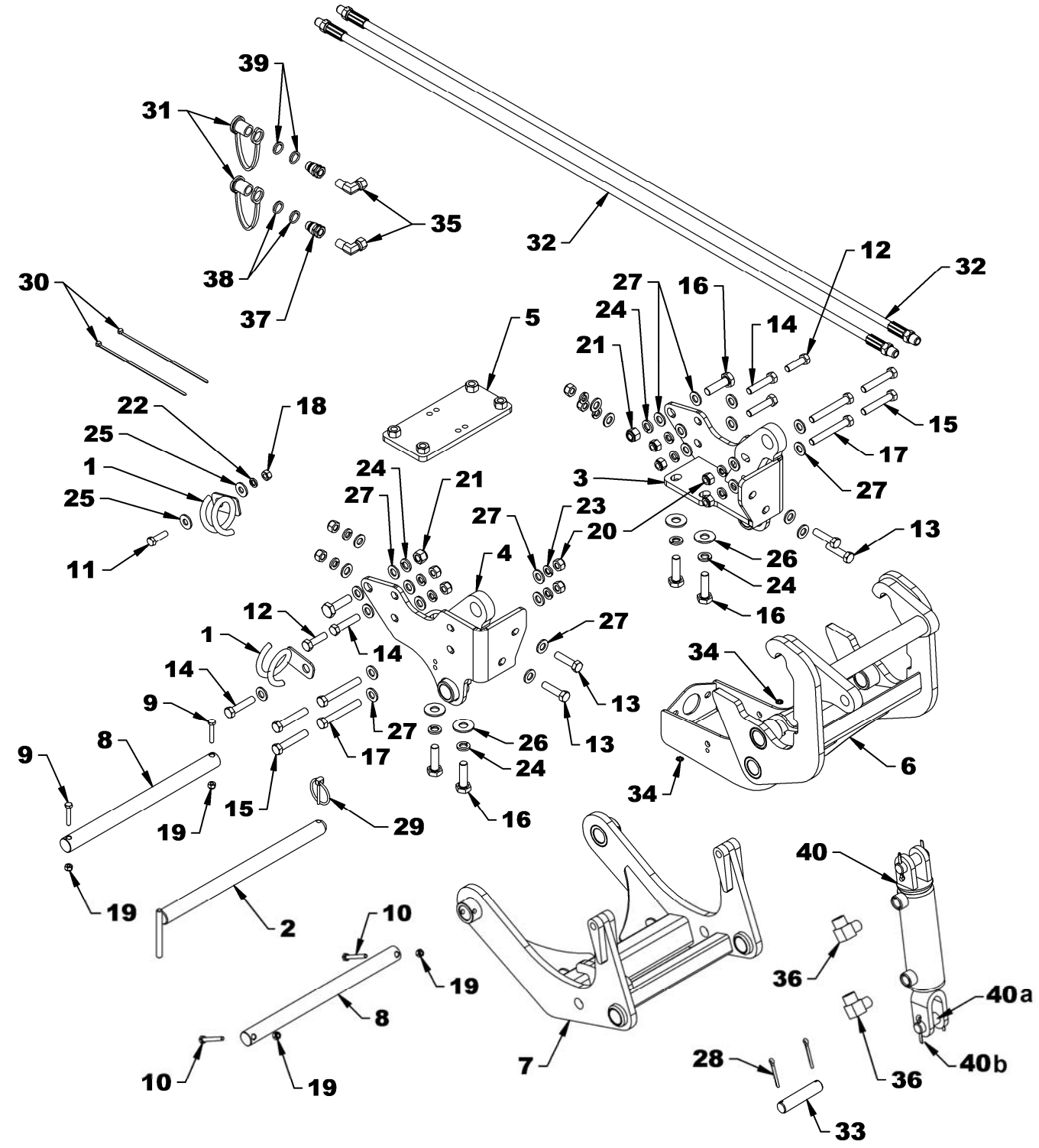

PARTS

DRIVE KIT			
REF.	**DESCRIPTION**	**QTY**	**PART #**
1	Square bar 1 1/4" X 5/8" lg., PTD	1	671802
2	Hex. bolt 1/4"NC x 3/4" lg., Gr.5, PTD	1	0100003
3	Hex bolt 3/8"NC x 1 1/2" lg., Gr.5, PTD	4	0100040
4	Allen setscrew 1/4"NF x 1/4" lg., black (included in 4300054)	6	0500003
5	Hex. nut 3/8"NC PQÉ	4	0900003
6	Nylon insert nut 1/4"NC, PTD	1	1000003
7	Lockwasher 3/8", PTD	4	1200004
8	Flat washer ø11/32" ID x 1 1/2" OD – stainless steel	1	1400038
9	Decal "DANGER" #799	2	2501015
10	Flange bearing 1" with grease fittings	2	4300054
11	Driveline – male section	1	4700047
12	Fixed driveline S7E X 40 1/4"	1	4700050
13	Output shaft ø1" X 14 7/8" lg.	1	4700101
14	Grease fitting 1/4"NF (included with 4300054)	2	654106

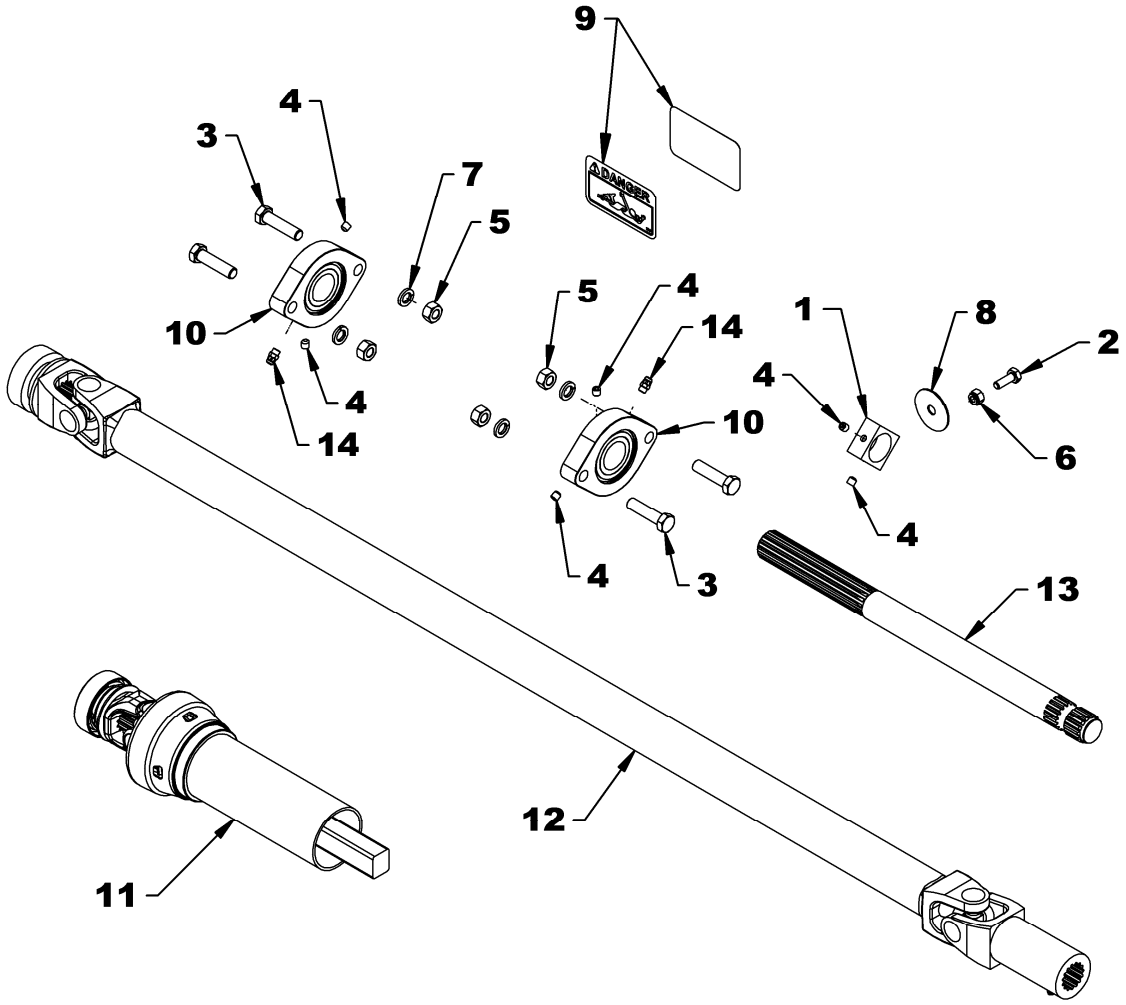

PARTS

DRIVELINE 4700050			
REF.	**DESCRIPTION**	**QTY**	**PART #**
1	Yoke repair kit	1	658113
2	Quick connect yoke	1	665810
3	Journal cross	2	4700066
4	Yoke and shaft	1	4700077
5	Yoke	1	4700068

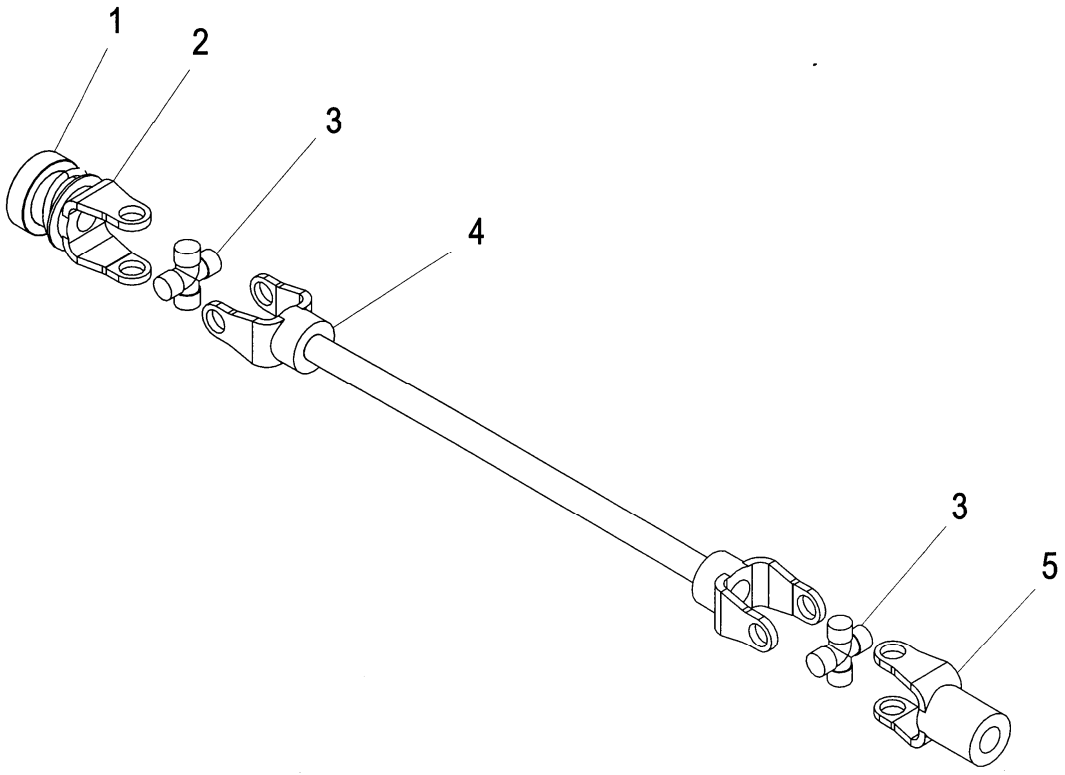

PARTS

DRIVELINE 4700047			
REF.	**DESCRIPTION**	**QTY**	**PART #**
1	Driveline ass'y – male part	1	4700047
2	Quick disconnect yoke ass'y	1	665810
3	Spring lock yoke repair kit	1	658113
4	Universal joint kit	1	4700066
5	Yoke and male shaft ass'y	1	4700075
6	Nylon repair kit	1	661555
7	Outer shield	1	4700078

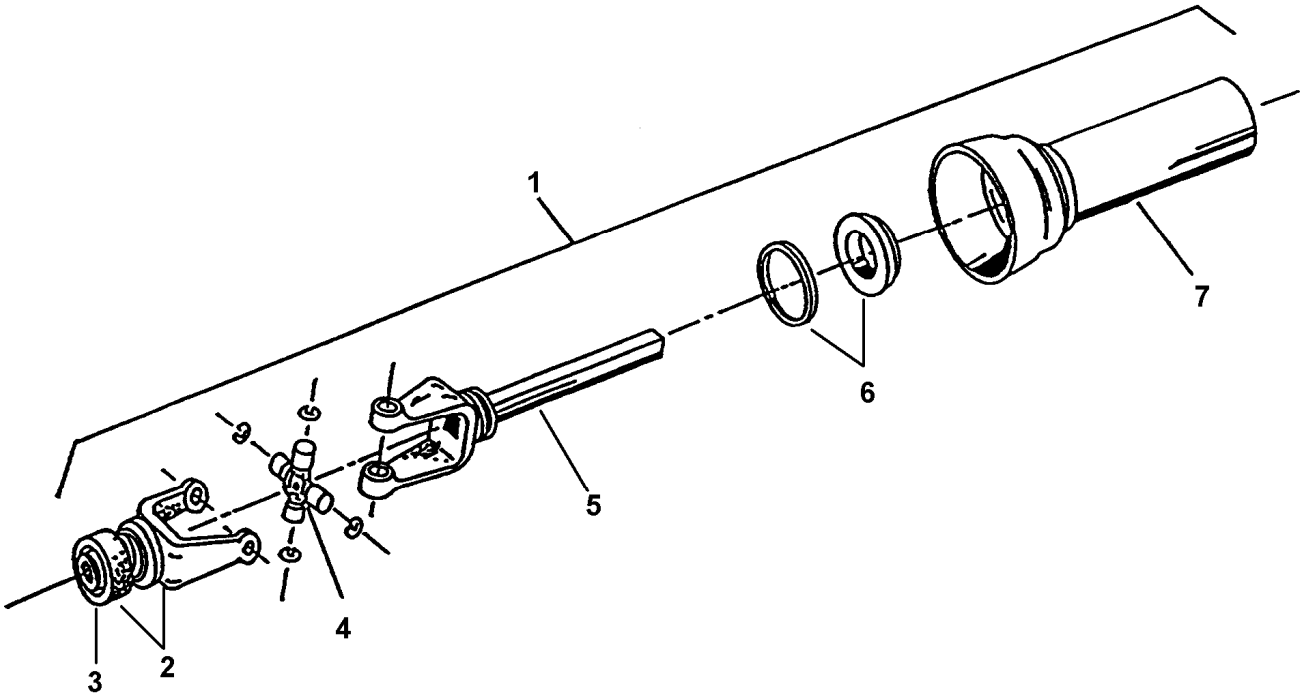

TORQUE SPECIFICATION TABLE

GENERAL SPECIFICATION TABLE

USE THE FOLLOWING TORQUES WHEN SPECIAL TORQUES ARE NOT GIVEN

Note: These values apply to fasteners as received from supplier dry, or when lubricated with normal engine oil. They do not apply if special graphited or moly sidulphide greases or other extreme pressure lubricants are used. These values apply to dry conditions; under lubricated conditions reduce by 25% the torques in this table.

BOLT HEAD IDENTIFICATION

INCHES Bolt Size	Grade 2		Grade 5		Grade 8	
in-tpi [1]	N-m [2]	lbs-ft [3]	N-m	lbs-ft	N-m	lbs-ft
1/4" – 20NC	7.4	5.6	11	8	16	12
1/4" – 28NF	8.5	6	13	10	18	14
5/16" – 18NC	15	11	24	17	33	25
5/16" – 24NF	17	13	26	19	37	27
3/8" – 16NC	27	20	42	31	59	44
3/8" – 24NF	31	22	47	35	67	49
7/16" – 14NC	43	32	67	49	95	70
7/16" – 20NF	49	36	75	55	105	78
1/2" – 13NC	66	49	105	76	145	105
1/2" – 20NF	75	55	115	85	165	120
9/16" – 12NC	95	70	150	110	210	155
9/16" – 18NF	105	79	165	120	235	170
5/8" – 11NC	130	97	205	150	285	210
5/8" – 18NF	150	110	230	170	325	240
3/4" – 10NC	235	170	360	265	510	375
3/4" – 16NF	260	190	405	295	570	420
7/8" – 9NC	225	165	585	430	820	605
7/8" – 14NF	250	185	640	475	905	670
1" – 8NC	340	250	875	645	1230	910
1" – 12NF	370	275	955	705	1350	995
1 1/8" – 7NC	480	355	1080	795	1750	1290
1 1/8" – 12NF	540	395	1210	890	1960	1440
1 1/4" – 7NC	680	500	1520	1120	2460	1820
1 1/4" – 12NF	750	555	1680	1240	2730	2010
1 3/8" – 6NC	890	655	1990	1470	3230	2380
1 3/8" – 12NF	1010	745	2270	1670	3680	2710
1 1/2" – 6NC	1180	870	2640	1950	4290	3160
1 1/2" – 12NF	1330	980	2970	2190	4820	3560

METRIC Bolt Size	5.8 Class 5.8		8.8 Class 8.8		NP 10.9 Class 10.9	
mm x pitch [4]	N-m	lbs-ft	N-m	lbs-ft	N-m	lbs-ft
M 5 X 0.8	4	3	6	5	9	7
M 6 X 1	7	5	11	8	15	11
M 8 X 1.25	17	12	26	19	36	27
M 8 X 1	18	13	28	21	39	29
M10 X 1.5	33	24	52	39	72	53
M10 X 0.75	39	29	61	45	85	62
M12 X 1.75	58	42	91	67	125	93
M12 X 1.5	60	44	95	70	130	97
M12 X 1	90	66	105	77	145	105
M14 X 2	92	68	145	105	200	150
M14 X 1.5	99	73	155	115	215	160
M16 X 2	145	105	225	165	315	230
M16 X 1.5	155	115	240	180	335	245
M18 X 2.5	195	145	310	230	405	300
M18 X 1.5	220	165	350	260	485	355
M20 X 2.5	280	205	440	325	610	450
M20 X 1.5	310	230	650	480	900	665
M24 X 3	480	355	760	560	1050	780
M24 X 2	525	390	830	610	1150	845
M30 X 3.5	960	705	1510	1120	2100	1550
M30 X 2	1060	785	1680	1240	2320	1710
M36 X 3.5	1730	1270	2650	1950	3660	2700
M36 X 2	1880	1380	2960	2190	4100	3220

[1] in-tpi = nominal thread diameter in inches-threads per inch
[2] N-m = newton-meters
[3] lbs-ft= pounds-foot
[4] mm x pitch = nominal thread diameter in millimeters x thread Pitch

*Torque tolerance +0%, -15% of torquing values. Unless otherwise specified use torque values listed above
***NOTE**: 1 lbs-ft = 12 lbs-in

ADAPTER INSTALLATION PROCESS

NPT THREAD IDENTIFICATION & TORQUE

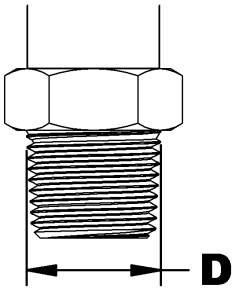

D		Identification of adapter	Number of turns to do after manual tightening
in	mm		
0.375	9.5	1/8 NPT	2.0 - 3.0
0.500	12.5	1/4 NPT	2.0 - 3.0
0.625	15.9	3/8 NPT	2.0 - 3.0
0.780	19.8	1/2 NPT	2.0 - 3.0
0.988	25.1	3/4 NPT	2.0 - 3.0
1.236	31.4	1 NPT	1.5 - 2.5
1.583	40.2	1 1/4 NPT	1.5 - 2.5
1.823	46.3	1 1/2 NPT	1.5 - 2.5

RECOMMENDED ASSEMBLY

The method used to assemble fittings with NPT threads is done in two stages. First firmly tighten by hand then tighten once again according to the number of turns listed in the above table. The following steps are recommended to minimize the risks of leaks and/or damages to the parts.

STEP 1: Inspect threads and tapping to make sure they are clean.

STEP 2: Measure the diameter (D) of the adapter and take note of the size taken.

STEP 3: Apply a sealant/lubricant product to the NPT threads (Teflon covered threads are preferable to other lubricating products). If PTFE tape (Teflon) is used, make between 1.5 or 2 turns clockwise, when viewed by the fitting end, keeping free the two first threads.

CAUTION: More than 2 turns can cause distortion or cracks in the orifice.

STEP 4: Tighten the fitting manually.

STEP 5: Screw the fitting the number of turns listed on the above table making sure that in the case of an elbow fitting the end is aligned to the desired position to connect the tube or hose. **Never unscrew a fitting to obtain the proper alignment.**

STEP 6: If a leak is detected after having followed the preceding instructions, check that the threads are not damaged and the number of seated threads is fulfilled (see details in next paragraph).

If the threads are damaged, replace the fitting. If the tapping is damaged, retap if possible or replace the part.

Usually, the number of threads seated is between 3.5 and 6. If the range is different it would indicate that the fitting was tightened too much or not enough or that the tightening was not within thread tolerances. If the fitting is not tight enough, tighten but never more than one turn. If it's too tight, control the threading and tapping and replace the section that has threads that are not within tolerances.

ADAPTER INSTALLATION PROCESS

JIC THREAD IDENTIFICATION & TORQUE

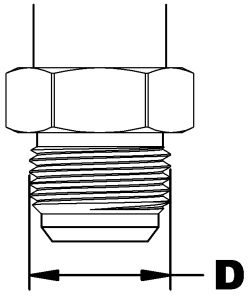

D		Identification	TORQUE	
in	mm	of adapter	lbs-ft	N-m
-	-	5/16 JIC	6-7	8-10
-	-	3/8 JIC	6-9	8-12
0.433	11	7/16 JIC	9-12	12-16
0.496	12.6	1/2 JIC	14-15	19-21
0.559	14.2	9/16 JIC	18-20	24-27
0.740	18.8	3/4 JIC	27-39	37-53
0.870	22.1	7/8 JIC	36-63	49-85
1.055	26.8	1 1/16 JIC	65-88	88-119
1.185	30.1	1 3/16 JIC	75-103	102-140
1.307	33.2	1 5/16 JIC	85-113	115-153
1.618	41.1	1 5/8 JIC	115-133	156-180
1.870	47.5	1 7/8 JIC	125-167	169-226
2.492	63.3	2 1/2 JIC	190-258	258-350

JIC flare fittings seal with metal to metal contact between the flared nose of the fitting and the flared tube face in the female connection.

The minimum torque values listed are to provide a benchmark that give optimum results for leak free connections. Actual torque values should be based on individual application.

NOTE: Do not apply thread sealant (Teflon tape) on the JIC threads.

Leaks can result from vibration, thermal cycling and from loads being supported by the connection (i.e. using the fitting in the connection to support mechanical loads).

IMPORTANT: Use the lowest torque value from the chart when wet torquing.

RECOMMENDED ASSEMBLY

STEP 1: Inspect for possible contamination or damage from shipping or handling. Sealing surface should be smooth.

STEP 2: Lubricate the threads and the entire surface of the cone with hydraulic fluid or a light lubricant.

STEP 3: Align mating components for hand connection and turn flare nut until sealing surfaces make full contact.

STEP 4: Torque nut to the values shown in the above table.

STEP 5: When torquing nut onto a straight flared fitting, it may be necessary to also place a wrench on the flared fitting wrench pad to prevent it from turning during assembly.

ALTERNATE ASSEMBLY METHOD

STEP 1: Inspect for possible contamination or damage from shipping or handling. Sealing surface should be smooth.

STEP 2: Lubricate the threads and the entire surface of the cone with hydraulic fluid or a light lubricant.

STEP 3: Align mating components for hand connection and turn flare nut until sealing surfaces make full contact.

STEP 4: Lightly wrench tighten the nut until there is resistance.

STEP 5: Place a wrench on wrench pad next to nut as near the 6 o'clock position as possible.

STEP 6: Place second wrench on nut as near the 3 o'clock position as possible.

STEP 7: Turn nut clockwise to no less than the 4 o'clock position, but no more than the 6 o'clock position. Required rotation generally decreases as size increases.

ADAPTER INSTALLATION PROCESS

ORB (O-RING BOSS) THREAD IDENTIFICATION & TORQUE

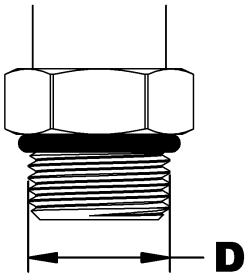

D		Identification	TORQUE	
in	mm	of adapter	lbs-ft	N-m
-		3/8 ORB	8-9	12-13
0.433	11	7/16 ORB	13-15	18-20
0.496	12.6	1/2 ORB	14-15	19-21
0.559	14.2	9/16 ORB	23-24	32-33
0.740	18.8	3/4 ORB	40-43	55-57
0.870	22.1	7/8 ORB	43-48	59-64
1.055	26.8	1 1/16 ORB	68-75	93-101
1.185	30.1	1 3/16 ORB	83-90	113-122
1.307	33.2	1 5/16 ORB	112-123	152-166
1.618	41.1	1 5/8 ORB	146-161	198-218
1.870	47.5	1 7/8 ORB	154-170	209-230
2.492	63.3	2 1/2 ORB	218-240	296-325

SAE O-rings (O-Ring Boss) are straight thread fittings that seal using an O-ring between the thread and the wrench flats of the fitting. The O-ring seals against the machined seat on the female port.

O-ring fittings can be either adjustable or non-adjustable. Nonadjustable fittings are screwed into a port where no alignment is needed. Adjustable fittings can be oriented in a specific direction.

Fittings with O-rings offer advantages over metal-to-metal fittings. Under or over-tightening any fitting can allow leakage, but all-metal fittings are more susceptible to leakage because they must be tightened to a higher and narrower torque range. This makes it easier to strip threads or crack or distort fitting components, which prevents proper sealing.

NOTE: Do not apply thread sealant (Teflon tape) on the ORB threads.

Leaks can also result from vibration, thermal cycling and from loads being supported by the connection (i.e. using the fitting in the connection to support mechanical loads).

IMPORTANT: Use the lowest torque value from the chart when wet torquing.

RECOMMENDED ASSEMBLY ORB (O-RING) NON-ADJUSTABLE

STEP 1: Inspect all components for damage or contamination.

STEP 2: Lubricate O-ring and threads on fitting with your hydraulic system fluid.

STEP 3: Turn fitting into port until finger tight, then torque to the value shown in the following table.

NOTE: Use the lowest torque value from the chart when wet torquing.

RECOMMENDED ASSEMBLY ORB (O-RING) ADJUSTABLE

STEP 1: Inspect all components for damage or contamination.

STEP 2: Lubricate O-ring and threads on fitting with your hydraulic system fluid.

STEP 3: Looking at fitting from the male ORB end, turn manually the nut as far as possible from the O-ring.

STEP 4: Using wrench, turn fitting into port until the washer touches thread nearest wrench pad.

STEP 5: Back off fitting counterclockwise not exceeding one revolution until it is oriented in the correct position.

STEP 6 : Place wrench on the wrench pad of fitting to prevent fitting from turning, and torque nut to the value shown in the above table.

Manufactured by:

Dalkotech Group

RAD Technologies Inc.
2835, Chemin de l'Aéroport
Thetford Mines, Québec, Canada, G6G 5R7

T +1 418 338-4499 - F +1 418 338-2522

info@radtech.ca
radtech.ca

Printed in Canada